ESTIMATE OF QUANTITIES - FLUME BELL JOINTS

MARK	LOCATION	SHAPE	NO.	LENGTH	WEIGHT	NO.	LENGTH	WEIGHT	NO.	LENGTH	WEIGHT	NO.	LENGTH	WEIGHT	NO.	LENGTH	WEIGHT	NO.	LENGTH	WEIGHT	MARK
JUNCTION BELL JOINT			3' x 3'			4' x 4'			5' x 3'			5' x 4'			5' x 5'			5' x 6'			
5x1	WALLS & FLOOR		3	16'-4	51	3	14'-3	45	3	18'-4	57	3	15'-3	48	3	15'-3	48	3	15'-3	48	5x1
5x3	WALLS VERT.		---	-----	----	6	4'-4	27	---	-----	----	6	4'-4	27	6	5'-4	33	6	6'-4	40	5x3
5y1	WALLS HORIZ.		10	4'-10	50	12	4'-10	50	10	4'-10	50	12	4'-10	50	14	4'-10	50	16	4'-10	50	5y1
5y2	FLOOR VERT.		5	6'-3	33	6	6'-3	39	7	6'-3	46	7	6'-3	46	7	6'-3	46	7	6'-3	46	5y2
5z1	FLOOR VERT.		5	3'-1	16	6	3'-1	19	7	3'-1	23	7	3'-1	23	7	3'-1	23	7	3'-1	23	5z1
TOTAL REINFORCING STEEL				150 LBS.			180 LBS.			176 LBS.			194 LBS.			200 LBS.			207 LBS.		
TOTAL CONCRETE				1.1 CU. YDS.			1.3 CU. YDS.			1.3 CU. YDS.			1.4 CU. YDS.			1.5 CU. YDS.			1.7 CU. YDS.		
CHUTE BELL JOINT			3' x 3'			4' x 4'			5' x 3'			5' x 4'			5' x 5'			5' x 6'			
5x2	WALLS & FLOOR		3	13'-2	41	3	15'-8	49	3	15'-2	47	3	16'-8	52	3	18'-2	57	3	19'-8	62	5x2
5y3	WALLS HORIZ.		8	4'-10	40	8	4'-10	40	8	4'-10	40	8	4'-10	40	10	4'-10	50	12	4'-10	60	5y3
5y4	FLOOR VERT.		5	6'-2	32	6	6'-2	39	7	6'-2	45	7	6'-2	45	7	6'-2	45	7	6'-2	45	5y4
5z1	FLOOR VERT.		5	3'-1	16	6	3'-1	19	7	3'-1	23	7	3'-1	23	7	3'-1	23	7	3'-1	23	5z1
TOTAL REINFORCING STEEL				129 LBS.			147 LBS.			155 LBS.			160 LBS.			175 LBS.			190 LBS.		
TOTAL CONCRETE				0.9 CU. YDS.			1.1 CU. YDS.			1.1 CU. YDS.			1.2 CU. YDS.			1.3 CU. YDS.			1.4 CU. YDS.		

CONCRETE PLACEMENT

S x H	JUNCTION BELL		CHUTE BELL	
	FOOTING	WALLS	FOOTING	WALLS
3' x 3'	0.7	0.5	0.7	0.2
4' x 4'	0.8	0.6	0.8	0.3
5' x 3'	0.8	0.5	0.8	0.2
5' x 4'	0.8	0.6	0.8	0.3
5' x 5'	0.8	0.7	0.8	0.4
5' x 6'	0.8	0.8	0.8	0.5

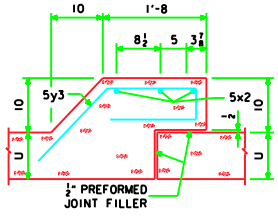

CHUTE WALLS

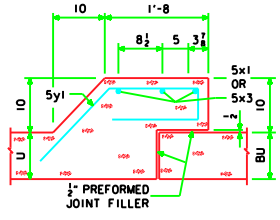

JUNCTION WALLS

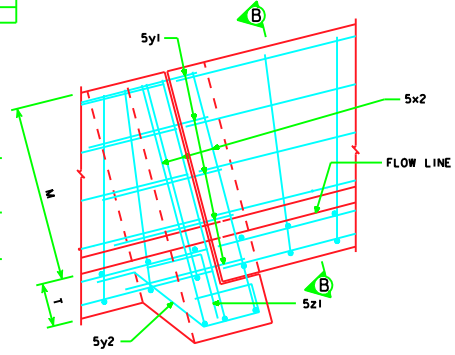

PART ELEVATION - CHUTE BELL JT.

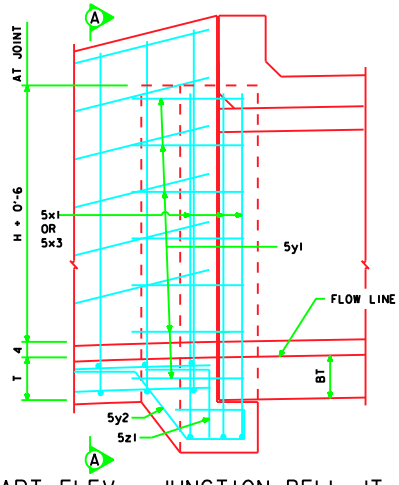

PART ELEV. - JUNCTION BELL JT.

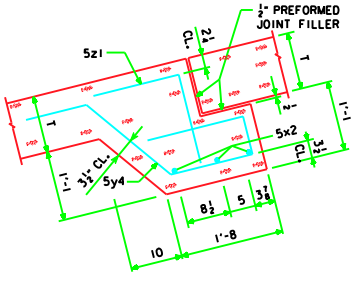

CHUTE FOOTING

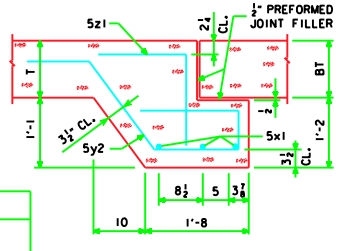

JUNCTION FOOTING

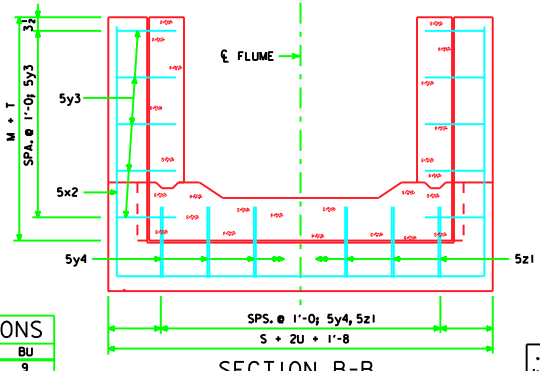

SECTION B-B

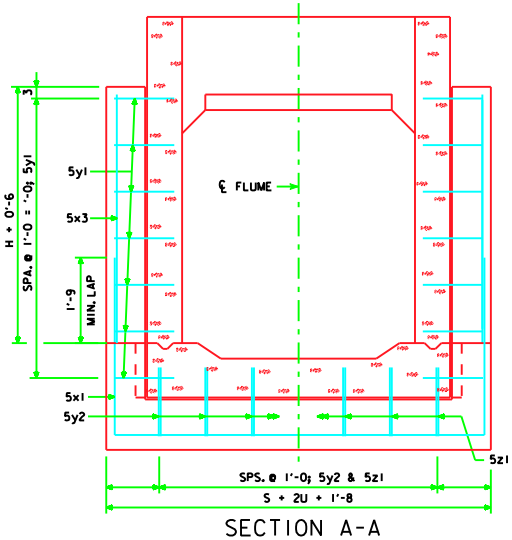

SECTION A-A

BENT BAR DETAILS

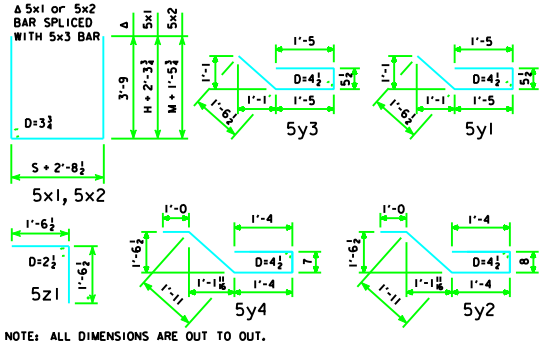

NOTE: ALL DIMENSIONS ARE OUT TO OUT.
D = PIN DIAMETER

S = CULVERT SPAN
H = CULVERT HEIGHT

BARREL & CHUTE DIMENSIONS

S x H	M	T	U	BT	BU
3' x 3'	2'-3	11	9	10	9
4' x 4'	3'-0	11	9	10	9
5' x 3'	2'-3	11	9	10	9
5' x 4'	3'-0	11	9	10	9
5' x 5'	3'-9	11	9	10	9
5' x 6'	4'-6	11	9	10	9

NOTES:

1. DIMENSIONS AND QUANTITIES SHOWN BASED ON 'U' FLUME WALLS, 'BU' BARREL WALLS, 'T' FLUME FLOOR AND 'BT' BARREL FLOOR THICKNESSES.
2. CHANGE LENGTHS OF BARS 5x1 AND ADJUST REINFORCING STEEL AND CONCRETE QUANTITIES ACCORDINGLY OTHER THAN WALL AND FLOOR THICKNESSES SHOWN.
3. FLOOR BARS m1 ARE TO BE SHORTENED 6" AT BELL JOINTS.
4. SEE STANDARD SHEET RCF-01-04 FOR GENERAL INFORMATION.

LATEST REVISION DATE : 04-07

APPROVED BY : Marvin L. McCandless

STANDARD DESIGN

FLUME BELL JOINTS

FOR

REINFORCED CONCRETE FLUMES - 3', 4' & 5' SPANS

IOWA DEPARTMENT OF TRANSPORTATION - HIGHWAY DIVISION

JANUARY, 2004

FBJ-01-04

REVISED 04-07 - 5x & 5y BAR LENGTHS CHANGED. BAR SIZES ADDED TO BAR LABELS.
FBJ0104.501 - THIS SHEET ISSUED 01-04.