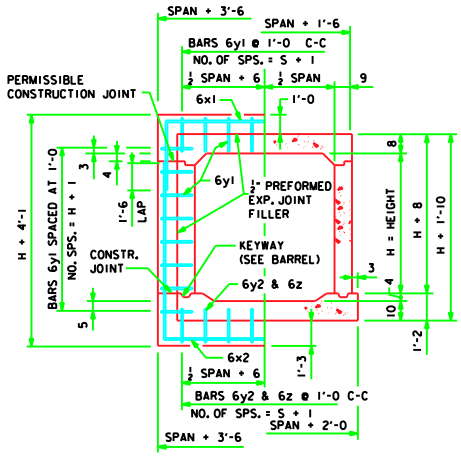

JOINT DETAIL
SECTION THRU BARREL

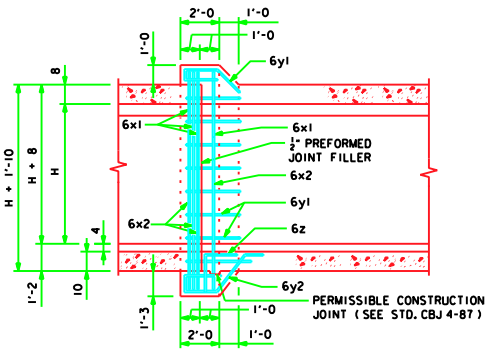

LONGITUDINAL SECTION

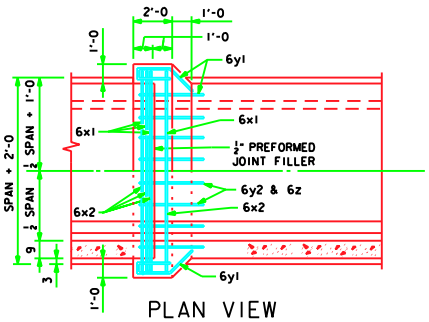

PLAN VIEW

ESTIMATE OF QUANTITIES - ONE JOINT - 6' SPAN

BILL OF REINFORCING STEEL			6' x 3'			6' x 4'			6' x 5'			6' x 6'			6' x 8'	
MARK	LOCATION	SHAPE	NO.	LENGTH	WEIGHT	NO.	LENGTH	WEIGHT	NO.	LENGTH	WEIGHT	NO.	LENGTH	WEIGHT	NO.	LENGTH	WEIGHT
6x1	SLAB AND WALLS		4	17'-5	105	4	17'-5	105	4	17'-5	105	4	17'-5	105	4	17'-5	105
6x2	FLOOR AND WALLS		4	17'-11	108	4	19'-11	120	4	17'-5	105	4	17'-5	105	4	17'-5	105
6x3	WALLS		—	—	—	—	—	—	8	4'-4	52	8	5'-4	64	8	7'-4	88
6y1	TOP AND SIDES		18	6'-2	167	20	6'-2	185	22	6'-2	204	24	6'-2	222	28	6'-2	259
6y2	BOTTOM		8	7'-3	87	8	7'-3	87	8	7'-3	87	8	7'-3	87	8	7'-3	87
6z	BOTTOM & FLOOR		8	3'-3	39	8	3'-3	39	8	3'-3	39	8	3'-3	39	8	3'-3	39
TOTAL WEIGHT (LBS.)					506			536			592			622			683
TOTAL CONCRETE				2.8 cu. yds.			3.0 cu. yds.			3.2 cu. yds.			3.4 cu. yds.			3.8 cu. yds.	

ESTIMATE OF QUANTITIES - ONE JOINT - 8' SPAN

BILL OF REINFORCING STEEL			8' x 4'			8' x 5'			8' x 6'			8' x 8'			8' x 10'	
MARK	LOCATION	SHAPE	NO.	LENGTH	WEIGHT	NO.	LENGTH	WEIGHT	NO.	LENGTH	WEIGHT	NO.	LENGTH	WEIGHT	NO.	LENGTH	WEIGHT
6x1	SLAB AND WALLS		4	19'-5	117	4	19'-5	117	4	19'-5	117	4	19'-5	117	4	19'-5	117
6x2	FLOOR AND WALLS		4	21'-11	132	4	19'-5	117	4	19'-5	117	4	19'-5	117	4	19'-5	117
6x3	WALLS		—	—	—	8	4'-4	52	8	5'-4	64	8	7'-4	88	8	9'-4	112
6y1	TOP AND SIDES		22	6'-2	204	24	6'-2	222	26	6'-2	241	30	6'-2	278	34	6'-2	315
6y2	BOTTOM		10	7'-3	109	10	7'-3	109	10	7'-3	109	10	7'-3	109	10	7'-3	109
6z	BOTTOM & FLOOR		10	3'-3	49	10	3'-3	49	10	3'-3	49	10	3'-3	49	10	3'-3	49
TOTAL WEIGHT (LBS.)					611			666			697			758			819
TOTAL CONCRETE				3.4 cu. yds.			3.6 cu. yds.			3.8 cu. yds.			4.2 cu. yds.			4.6 cu. yds.	

CONCRETE PLACEMENT

SIZE	FOOTING	WALLS	SLAB
6' x 3'	1.300	.494	1.052
6' x 4'	1.300	.679	1.052
6' x 5'	1.300	.864	1.052
6' x 6'	1.300	1.049	1.052
6' x 8'	1.300	1.420	1.052
8' x 4'	1.532	.679	1.238
8' x 5'	1.532	.864	1.238
8' x 6'	1.532	1.049	1.238
8' x 8'	1.532	1.420	1.238
8' x 10'	1.532	1.790	1.238

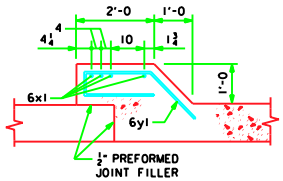

TOP & SIDES - BARS 6y1

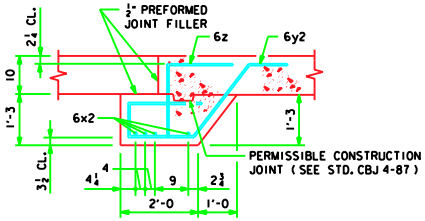

BOTTOM BARS - 6y2 & 6z

BENT BAR DETAILS

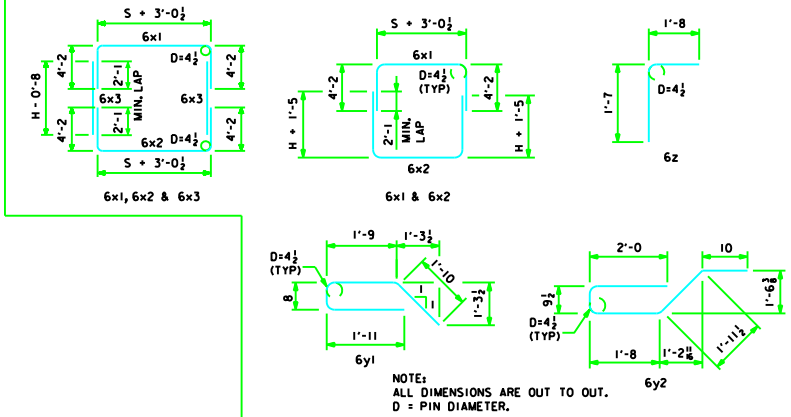

NOTE:
ALL DIMENSIONS ARE OUT TO OUT.
D = PIN DIAMETER.

NOTES:

1. DIMENSIONS AND QUANTITIES SHOWN BASED ON SLAB THICKNESS OF 8", WALL = 9", AND FLOOR = 10".
2. CHANGE LENGTHS OF BARS 6x1, 6x2, 6z, AND ADJUST REINFORCING STEEL AND CONCRETE QUANTITIES ACCORDINGLY FOR SLAB, WALL, AND FLOOR THICKNESSES OTHER THAN SHOWN.
3. ALL BAR LENGTHS ARE ESTIMATED WITH A 2" CLEARANCE FROM CONCRETE EDGE TO OUTSIDE OF BAR, EXCEPT AS NOTED.
4. MATERIAL AND CONSTRUCTION TO BE IN ACCORDANCE WITH THE CURRENT STANDARD SPECIFICATIONS OF I.D.O.T.
5. SEE DRAWING RCB-G1-87 FOR GENERAL INFORMATION, SPECIFICATIONS, AND DESIGN STRESSES.
6. BARREL FLOOR BARS m1 ARE TO BE SHORTENED 6" AT BELL JOINTS.

LATEST REVISION DATE : 04-07

APPROVED BY :

STANDARD DESIGN

CULVERT BELL JOINTS

FOR
REINFORCED CONCRETE BOX CULVERTS
6' AND 8' SPANS

IOWA DEPARTMENT OF TRANSPORTATION - HIGHWAY DIVISION

MAY , 1987

CBJ 2-87

REVISED 04-07 - BAR SIZE ADDED TO BAR LABEL. UPDATED BAR LISTS TO INCLUDE INDIVIDUAL WEIGHTS. 6x BAR LENGTHS CHANGED.
CBJ 2-87