BILL OF REINFORCING STEEL FOR SUPERSTRUCTURE - 90' BRIDGE

LOCATION \ SKEW	SHAPE	BAR	0° NO.	0° LENGTH	0° WEIGHT	15° NO.	15° LENGTH	15° WEIGHT	30° NO.	30° LENGTH	30° WEIGHT	45° NO.	45° LENGTH	45° WEIGHT
SLAB LONGITUDINAL BOTTOM		8a1	58	21'-1	3265	58	21'-1	3265	58	21'-1	3265	58	21'-1	3265
SLAB LONGITUDINAL BOTTOM		8a2	58	30'-3	4685	58	30'-3	4685	58	30'-3	4685	58	30'-3	4685
SLAB LONGITUDINAL BOTTOM		8a3	58	28'-6	4414	58	28'-6	4414	58	28'-6	4414	58	28'-6	4414
SLAB LONGITUDINAL BOTTOM		8a4	58	26'-7	4117	58	26'-7	4117	58	26'-7	4117	58	26'-7	4117
SLAB LONGITUDINAL BOTTOM		8a5	29	28'-0	2169	29	28'-0	2169	29	28'-0	2169	29	28'-0	2169
SLAB LONGITUDINAL BOTTOM, AT RAIL		8a6	8	33'-4	712	8	33'-4	712	8	33'-4	712	8	33'-4	712
SLAB LONGITUDINAL BOTTOM, AT RAIL		8a7	4	34'-4	367	4	34'-4	367	4	34'-4	367	4	34'-4	367
SLAB LONGITUDINAL BOTTOM, AT RAIL		8a8	8	23'-10	510	8	23'-10	510	8	23'-10	510	8	23'-10	510
SLAB LONGITUDINAL BOTTOM, AT RAIL		8a9	4	21'-0	225	4	21'-0	225	4	21'-0	225	4	21'-0	225
SLAB LONGITUDINAL TOP		6b1	58	6'-10	596	58	6'-10	596	58	6'-10	596	58	6'-10	596
SLAB LONGITUDINAL TOP		9b2	58	22'-9	4487	58	22'-9	4487	58	22'-9	4487	58	22'-9	4487
SLAB LONGITUDINAL TOP		9b3	58	33'-10	6672	58	33'-10	6672	58	33'-10	6672	58	33'-10	6672
SLAB LONGITUDINAL TOP		6b4	58	11'-10	1031	58	11'-10	1031	58	11'-10	1031	58	11'-10	1031
SLAB LONGITUDINAL TOP		9b5	58	27'-6	5423	58	27'-6	5423	58	27'-6	5423	58	27'-6	5423
SLAB LONGITUDINAL TOP		6b6	29	16'-10	734	29	16'-10	734	29	16'-10	734	29	16'-10	734
SLAB LONGITUDINAL TOP, AT RAIL		6b8	8	24'-10	299	8	24'-10	299	8	24'-10	299	8	24'-10	299
SLAB LONGITUDINAL TOP, AT RAIL		9b9	8	19'-6	531	8	19'-6	531	8	19'-6	531	8	19'-6	531
SLAB LONGITUDINAL TOP, AT RAIL		6b10	4	18'-0	109	4	18'-0	109	4	18'-0	109	4	18'-0	109
SLAB LONGITUDINAL TOP, AT RAIL		6b11	8	27'-4	329	8	27'-4	329	8	27'-4	329	8	27'-4	329
SLAB LONGITUDINAL TOP, AT RAIL		10b12	8	13'-3	457	8	13'-3	457	8	13'-3	457	8	13'-3	457
SLAB TRANSVERSE BOTTOM		6c1	87	25'-5	3322	87	26'-4	3442	78	25'-5	2978	68	25'-5	2596
SLAB TRANSVERSE BOTTOM		6c2	87	23'-3	3039	87	24'-1	3148	79	23'-3	2759	70	23'-3	2445
SLAB TRANSVERSE ENDS, BOTTOM		6c3	0	-	-	-	-	-	12	VARIES	267	20	VARIES	459
SLAB TRANSVERSE ENDS, BOTTOM		6c4	0	-	-	-	-	-	11	VARIES	255	20	VARIES	434
SLAB TRANSVERSE ENDS, BOTTOM		6c5	0	-	-	-	-	-	11	VARIES	213	19	VARIES	350
SLAB TRANSVERSE ENDS, BOTTOM		6c6	0	-	-	-	-	-	11	VARIES	230	18	VARIES	386
SLAB TRANSVERSE TOP		5d1	87	25'-9	2337	87	26'-8	2420	78	25'-9	2095	68	25'-9	1827
SLAB TRANSVERSE TOP		5d2	87	23'-3	2110	87	24'-1	2186	79	23'-3	1916	70	23'-3	1698
SLAB TRANSVERSE ENDS, TOP		5d3	-	-	-	-	-	-	12	VARIES	186	20	VARIES	319
SLAB TRANSVERSE ENDS, TOP		5d4	-	-	-	-	-	-	11	VARIES	177	20	VARIES	301
SLAB TRANSVERSE ENDS, TOP		5d5	-	-	-	-	-	-	11	VARIES	148	19	VARIES	243
SLAB TRANSVERSE ENDS, TOP		5d6	-	-	-	-	-	-	11	VARIES	160	18	VARIES	268
SLAB, TRANSVERSE AT ABUTMENT		8e1	20	28'-4	1513	20	29'-2	1558	20	31'-9	1696	20	37'-6	2003
SLAB, TRANSVERSE AT ABUTMENT		8e2	20	23'-4	1246	20	24'-1	1287	20	26'-9	1429	20	32'-5	1732
SLAB, HAIRPINS, AT ABUTMENT		6e3	100	6'-10	1027	100	6'-11	1039	100	7'-3	1089	100	7'-11	1190
PIER CAP HOOPS		5h1	80	7'-3	605	80	7'-3	605	80	7'-3	605	120	7'-3	908
PIER CAP ENDS		8h2	4	14'-5	154	4	14'-5	154	4	14'-5	154	4	14'-5	154
PIER CAP, BOTTOM LONGITUDINAL		8h3	8	27'-5	586	8	28'-8	613	8	31'-8	677	8	37'-10	809
PIER CAP, BOTTOM LONGITUDINAL		8h4	8	21'-11	469	8	22'-4	478	8	24'-6	524	8	29'-8	634
PIER CAP, TOP LONGITUDINAL		8h5	4	28'-2	301	4	29'-6	316	4	32'-8	349	4	38'-11	416
PIER CAP, TOP LONGITUDINAL		8h6	4	23'-5	251	4	23'-11	256	4	26'-3	281	4	31'-6	337
TOP OF SLAB, TRANSVERSE, AT RAIL		5j1	172	8'-6	1525	172	8'-6	1525	166	8'-6	1472	164	8'-6	1454
WING, VERTICAL		5m1-4	32	SHOWN	117	32	SHOWN	117	32	SHOWN	117	32	SHOWN	117
WING, HORIZONTAL		5n1	24	6'-8	167	24	6'-8	167	24	6'-8	167	24	6'-8	167
PAVING SUPPORT, TRANSVERSE		5p1	44	8'-10	406	46	8'-10	424	50	8'-10	461	62	8'-10	572
PAVING SUPPORT LONGITUDINAL		5p3	6	24'-9	155	6	26'-1	164	6	28'-9	180	6	34'-7	217
PAVING SUPPORT LONGITUDINAL		5p4	6	22'-0	138	6	22'-10	143	6	25'-5	160	6	31'-1	195
SUB TOTAL - LBS.					60,600			61,174			61,877			63,363
BARRIER RAIL - SEE LIST ON RAIL SHEET J44-46-06					5642			5642			5642			5642
OPEN RAIL - SEE LIST ON RAIL SHEET J44-49-06					5757			5757			5757			5757
TOTAL - LBS. WITH MONOLITHIC PIER CAP	WITH BARRIER RAIL				66,242			66,816			67,519			69,005
	WITH OPEN RAIL				66,357			66,931			67,634			69,120
TOTAL - LBS. WITH NON-MONOLITHIC PIER CAP	WITH BARRIER RAIL				63,876			64,394			64,929			65,747
SAME AS ABOVE EXCEPT ALL "h" BARS DELETED	WITH OPEN RAIL				63,991			64,509			65,044			65,862

BENT BAR DETAILS

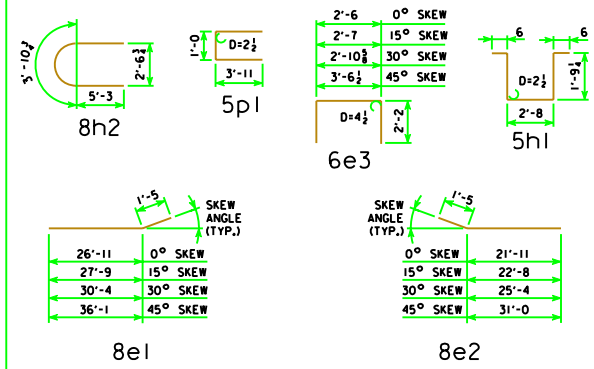

NOTE: ALL DIMENSIONS ARE OUT TO OUT. D = PIN DIAMETER.

NOTES:

ALL REINFORCING STEEL SHALL BE EPOXY COATED.

THE TRANSVERSE REBARS ARE DETAILED WITH A SPLICE LAP. AT THE CONTRACTOR'S OPTION, THIS LAP MAY BE ELIMINATED BY FURNISHING FULL LENGTH BARS WITH NO REDUCTION IN PAY WEIGHT FOR SAME.

ESTIMATED QUANTITIES FOR SUPERSTRUCTURE - 90' BRIDGE

ITEM		SKEW	WITH MONOLITHIC PIER CAP 0°	15°	30°	45°	WITH NON-MONOLITHIC PIER CAP 0°	15°	30°	45°
WITH BARRIER RAIL	*STRUCTURAL CONCRETE (BRIDGE)	C.Y.	259.7	261.2	266.3	277.5	253.3	254.6	259.0	268.6
	REINFORCING STEEL EPOXY COATED	LBS.	66,242	66,816	67,519	69,005	63,876	64,394	64,929	65,747
	CONCRETE BARRIER OR OPEN RAIL	LIN. FT.	202.0	202.2	202.9	204.5	202.0	202.2	202.9	204.5
WITH OPEN RAIL	*STRUCTURAL CONCRETE (BRIDGE)	C.Y.	259.5	261.0	266.1	277.3	253.1	254.4	258.8	268.4
	REINFORCING STEEL EPOXY COATED	LBS.	66,357	66,931	67,634	69,120	63,991	64,509	65,044	65,862

* INCLUDES 4 WINGS @ 0.71 C.Y. EACH; EXCLUDES RAIL CONCRETE.

LATEST REVISION DATE

APPROVED BY BRIDGE ENGINEER

Iowa Department of Transportation
Highway Division

STANDARD DESIGN - 44' ROADWAY, 3 SPAN BRIDGES

CONTINUOUS CONCRETE SLAB BRIDGES

NOVEMBER, 2006

SUPERSTRUCTURE DETAILS
90'-0 BRIDGE

J44-07-06