BILL OF REINFORCING STEEL FOR SUPERSTRUCTURE - 80' BRIDGE

LOCATION \ SKEW	SHAPE	BAR	0° NO.	0° LENGTH	0° WEIGHT	15° NO.	15° LENGTH	15° WEIGHT	30° NO.	30° LENGTH	30° WEIGHT	45° NO.	45° LENGTH	45° WEIGHT
SLAB LONGITUDINAL BOTTOM		8a1	58	19'-4	2994	58	19'-4	2994	58	19'-4	2994	58	19'-4	2994
SLAB LONGITUDINAL BOTTOM		8a2	58	27'-0	4182	58	27'-0	4182	58	27'-0	4182	58	27'-0	4182
SLAB LONGITUDINAL BOTTOM		8a3	58	29'-1	4504	58	29'-1	4504	58	29'-1	4504	58	29'-1	4504
SLAB LONGITUDINAL BOTTOM		7a4	58	24'-1	2856	58	24'-1	2856	58	24'-1	2856	58	24'-1	2856
SLAB LONGITUDINAL BOTTOM		7a5	29	24'-6	1453	29	24'-6	1453	29	24'-6	1453	29	24'-6	1453
SLAB LONGITUDINAL BOTTOM, AT RAIL		7a6	8	29'-10	488	8	29'-10	488	8	29'-10	488	8	29'-10	488
SLAB LONGITUDINAL BOTTOM, AT RAIL		7a7	4	29'-4	240	4	29'-4	240	4	29'-4	240	4	29'-4	240
SLAB LONGITUDINAL BOTTOM, AT RAIL		8a8	8	21'-10	467	8	21'-10	467	8	21'-10	467	8	21'-10	467
SLAB LONGITUDINAL BOTTOM, AT RAIL		8a9	4	25'-6	273	4	25'-6	273	4	25'-6	273	4	25'-6	273
SLAB LONGITUDINAL TOP		6b1	58	18'-4	1598	58	18'-4	1598	58	18'-4	1598	58	18'-4	1598
SLAB LONGITUDINAL TOP		9b2	58	21'-9	4290	58	21'-9	4290	58	21'-9	4290	58	21'-9	4290
SLAB LONGITUDINAL TOP		9b3	58	30'-10	6081	58	30'-10	6081	58	30'-10	6081	58	30'-10	6081
SLAB LONGITUDINAL TOP		6b4	58	6'-4	552	58	6'-4	552	58	6'-4	552	58	6'-4	552
SLAB LONGITUDINAL TOP		8b5	58	21'-3	3291	58	21'-3	3291	58	21'-3	3291	58	21'-3	3291
SLAB LONGITUDINAL TOP		6b6	29	16'-4	712	29	16'-4	712	29	16'-4	712	29	16'-4	712
SLAB LONGITUDINAL TOP, AT RAIL		6b8	8	24'-4	293	8	24'-4	293	8	24'-4	293	8	24'-4	293
SLAB LONGITUDINAL TOP, AT RAIL		9b9	8	23'-6	640	8	23'-6	640	8	23'-6	640	8	23'-6	640
SLAB LONGITUDINAL TOP, AT RAIL		8b10	8	32'-10	702	8	32'-10	702	8	32'-10	702	8	32'-10	702
SLAB TRANSVERSE BOTTOM		6c1	77	25'-5	2940	77	26'-4	3046	68	25'-5	2596	58	25'-5	2215
SLAB TRANSVERSE BOTTOM		6c2	77	23'-3	2689	77	24'-1	2786	69	23'-3	2410	60	23'-3	2096
SLAB TRANSVERSE ENDS, BOTTOM		6c3	-	-	-	-	-	-	12	VARIES	267	20	VARIES	459
SLAB TRANSVERSE ENDS, BOTTOM		6c4	-	-	-	-	-	-	11	VARIES	255	20	VARIES	434
SLAB TRANSVERSE ENDS, BOTTOM		6c5	-	-	-	-	-	-	11	VARIES	213	19	VARIES	350
SLAB TRANSVERSE ENDS, BOTTOM		6c6	-	-	-	-	-	-	11	VARIES	230	18	VARIES	386
SLAB TRANSVERSE TOP		5d1	77	25'-9	2069	77	26'-8	2142	68	25'-9	1827	58	25'-9	1558
SLAB TRANSVERSE TOP		5d2	77	23'-3	1868	77	24'-1	1935	69	23'-3	1674	60	23'-3	1455
SLAB TRANSVERSE ENDS, TOP		5d3	-	-	-	-	-	-	12	VARIES	186	20	VARIES	319
SLAB TRANSVERSE ENDS, TOP		5d4	-	-	-	-	-	-	11	VARIES	177	20	VARIES	301
SLAB TRANSVERSE ENDS, TOP		5d5	-	-	-	-	-	-	11	VARIES	148	19	VARIES	243
SLAB TRANSVERSE ENDS, TOP		5d6	-	-	-	-	-	-	11	VARIES	160	18	VARIES	268
SLAB, TRANSVERSE AT ABUTMENT		8e1	20	28'-4	1513	20	29'-2	1558	20	31'-9	1696	20	37'-6	2003
SLAB, TRANSVERSE AT ABUTMENT		8e2	20	23'-4	1246	20	24'-1	1287	20	26'-9	1429	20	32'-5	1732
SLAB, HAIRPINS, AT ABUTMENT		6e3	100	6'-10	1027	100	6'-11	1039	100	7'-3	1089	100	7'-11	1190
PIER CAP HOOPS		5h1	72	7'-1	532	72	7'-1	532	90	7'-1	665	108	7'-1	798
PIER CAP ENDS		8h2	4	14'-5	154	4	14'-5	154	4	14'-5	154	4	14'-5	154
PIER CAP, BOTTOM LONGITUDINAL		8h3	8	27'-5	586	8	28'-8	613	8	31'-8	677	8	37'-10	809
PIER CAP, BOTTOM LONGITUDINAL		8h4	8	21'-11	469	8	22'-4	478	8	24'-6	524	8	29'-8	634
PIER CAP, TOP LONGITUDINAL		8h5	4	28'-2	301	4	29'-6	316	4	32'-8	349	4	38'-11	416
PIER CAP, TOP LONGITUDINAL		8h6	4	23'-5	251	4	23'-11	256	4	26'-3	281	4	31'-6	337
TOP OF SLAB, TRANSVERSE, AT RAIL		5j1	152	8'-6	1348	152	8'-6	1348	146	8'-6	1295	144	8'-6	1277
WING, VERTICAL		5m1-4	32	SHOWN	117	32	SHOWN	117	32	SHOWN	117	32	SHOWN	117
WING, HORIZONTAL		5n1	24	6'-8	167	24	6'-8	167	24	6'-8	167	24	6'-8	167
PAVING SUPPORT, TRANSVERSE		5p1	44	8'-10	406	46	8'-10	424	50	8'-10	461	62	8'-10	572
PAVING SUPPORT LONGITUDINAL		5p3	6	24'-9	155	6	26'-1	164	6	28'-9	180	6	34'-7	217
PAVING SUPPORT LONGITUDINAL		5p4	6	22'-0	138	6	22'-10	143	6	25'-5	160	6	31'-1	195
SUB TOTAL - LBS.					53,592			54,121			55,003			56,318
BARRIER RAIL - SEE LIST ON RAIL SHEET J44-46-06					5156			5156			5156			5156
OPEN RAIL - SEE LIST ON RAIL SHEET J44-49-06					5261			5261			5261			5261
TOTAL - LBS. WITH MONOLITHIC PIER CAP		WITH BARRIER RAIL			58,748			59,277			60,159			61,474
		WITH OPEN RAIL			58,853			59,382			60,264			61,579
TOTAL - LBS. WITH NON-MONOLITHIC PIER CAP		WITH BARRIER RAIL			56,455			56,928			57,509			58,326
SAME AS ABOVE EXCEPT ALL "h" BARS DELETED		WITH OPEN RAIL			56,560			57,033			57,614			58,431

BENT BAR DETAILS

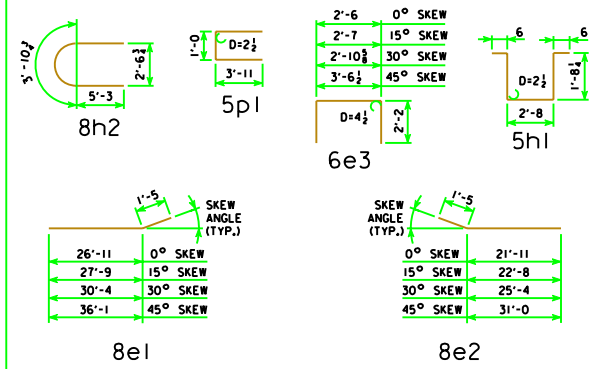

NOTE: ALL DIMENSIONS ARE OUT TO OUT. D = PIN DIAMETER.

NOTES:

ALL REINFORCING STEEL SHALL BE EPOXY COATED.

THE TRANSVERSE REBARS ARE DETAILED WITH A SPLICE LAP. AT THE CONTRACTOR'S OPTION, THIS LAP MAY BE ELIMINATED BY FURNISHING FULL LENGTH BARS WITH NO REDUCTION IN PAY WEIGHT FOR SAME.

ESTIMATED QUANTITIES FOR SUPERSTRUCTURE - 80' BRIDGE

ITEM		SKEW	WITH MONOLITHIC PIER CAP 0°	15°	30°	45°	WITH NON-MONOLITHIC PIER CAP 0°	15°	30°	45°
WITH BARRIER RAIL	*STRUCTURAL CONCRETE (BRIDGE)	C.Y.	224.8	226.3	231.5	242.8	218.4	219.7	224.2	233.9
	REINFORCING STEEL EPOXY COATED	LBS.	58,748	59,277	60,159	61,474	56,455	56,928	57,509	58,326
CONCRETE BARRIER OR OPEN RAIL		LIN. FT.	182.0	182.2	182.9	184.5	182.0	182.2	182.9	184.5
WITH OPEN RAIL	*STRUCTURAL CONCRETE (BRIDGE)	C.Y.	224.6	226.1	231.3	242.6	218.2	219.5	224.0	233.8
	REINFORCING STEEL EPOXY COATED	LBS.	58,853	59,382	60,264	61,579	56,560	57,033	57,614	58,431

* INCLUDES 4 WINGS @ 0.71 C.Y. EACH; EXCLUDES RAIL CONCRETE.

LATEST REVISION DATE

APPROVED BY BRIDGE ENGINEER

Iowa Department of Transportation
Highway Division

STANDARD DESIGN - 44' ROADWAY, 3 SPAN BRIDGES

CONTINUOUS CONCRETE SLAB BRIDGES

NOVEMBER, 2006

SUPERSTRUCTURE DETAILS 80'-0 BRIDGE

J44-05-06