BILL OF REINFORCING STEEL FOR SUPERSTRUCTURE - 70' BRIDGE

LOCATION	SHAPE	BAR	0° NO.	0° LENGTH	0° WEIGHT	15° NO.	15° LENGTH	15° WEIGHT	30° NO.	30° LENGTH	30° WEIGHT	45° NO.	45° LENGTH	45° WEIGHT
SLAB LONGITUDINAL BOTTOM		7a1	58	17'-1	2026	58	17'-1	2026	58	17'-1	2026	58	17'-1	2026
SLAB LONGITUDINAL BOTTOM		8a2	58	25'-0	3872	58	25'-0	3872	58	25'-0	3872	58	25'-0	3872
SLAB LONGITUDINAL BOTTOM		7a3	58	25'-4	3004	58	25'-4	3004	58	25'-4	3004	58	25'-4	3004
SLAB LONGITUDINAL BOTTOM		8a4	58	21'-10	3382	58	21'-10	3382	58	21'-10	3382	58	21'-10	3382
SLAB LONGITUDINAL BOTTOM		7a5	29	22'-0	1305	29	22'-0	1305	29	22'-0	1305	29	22'-0	1305
SLAB LONGITUDINAL BOTTOM, AT RAIL		7a6	8	25'-10	423	8	25'-10	423	8	25'-10	423	8	25'-10	423
SLAB LONGITUDINAL BOTTOM, AT RAIL		7a7	4	27'-4	224	4	27'-4	224	4	27'-4	224	4	27'-4	224
SLAB LONGITUDINAL BOTTOM, AT RAIL		8a8	8	19'-4	413	8	19'-4	413	8	19'-4	413	8	19'-4	413
SLAB LONGITUDINAL BOTTOM, AT RAIL		8a9	4	23'-6	251	4	23'-6	251	4	23'-6	251	4	23'-6	251
SLAB LONGITUDINAL TOP		6b1	58	7'-10	683	58	7'-10	683	58	7'-10	683	58	7'-10	683
SLAB LONGITUDINAL TOP		8b2	58	18'-3	2827	58	18'-3	2827	58	18'-3	2827	58	18'-3	2827
SLAB LONGITUDINAL TOP		8b3	58	26'-4	4078	58	26'-4	4078	58	26'-4	4078	58	26'-4	4078
SLAB LONGITUDINAL TOP		7b4	58	21'-1	2500	58	21'-1	2500	58	21'-1	2500	58	21'-1	2500
SLAB LONGITUDINAL TOP		8b5	58	12'-6	1936	58	12'-6	1936	58	12'-6	1936	58	12'-6	1936
SLAB LONGITUDINAL TOP		6b6	29	20'-4	886	29	20'-4	886	29	20'-4	886	29	20'-4	886
SLAB LONGITUDINAL TOP, AT RAIL		8b8	8	38'-10	830	8	38'-10	830	8	38'-10	830	8	38'-10	830
SLAB LONGITUDINAL TOP, AT RAIL		8b9	8	28'-10	616	8	28'-10	616	8	28'-10	616	8	28'-10	616
SLAB TRANSVERSE BOTTOM		6c1	67	25'-5	2558	67	26'-4	2650	58	25'-5	2215	48	25'-5	1833
SLAB TRANSVERSE BOTTOM		6c2	67	23'-3	2340	67	24'-1	2424	59	23'-3	2061	50	23'-3	1747
SLAB TRANSVERSE ENDS, BOTTOM		6c3	-	-	-	-	-	-	12	VARIES	267	20	VARIES	459
SLAB TRANSVERSE ENDS, BOTTOM		6c4	-	-	-	-	-	-	11	VARIES	255	20	VARIES	434
SLAB TRANSVERSE ENDS, BOTTOM		6c5	-	-	-	-	-	-	11	VARIES	213	19	VARIES	350
SLAB TRANSVERSE ENDS, BOTTOM		6c6	-	-	-	-	-	-	11	VARIES	230	18	VARIES	386
SLAB TRANSVERSE TOP		5d1	67	25'-9	1800	67	26'-8	1864	58	25'-9	1558	48	25'-9	1290
SLAB TRANSVERSE TOP		5d2	67	23'-3	1625	67	24'-1	1683	59	23'-3	1431	50	23'-3	1213
SLAB TRANSVERSE ENDS, TOP		5d3	-	-	-	-	-	-	12	VARIES	186	20	VARIES	319
SLAB TRANSVERSE ENDS, TOP		5d4	-	-	-	-	-	-	11	VARIES	177	20	VARIES	301
SLAB TRANSVERSE ENDS, TOP		5d5	-	-	-	-	-	-	11	VARIES	148	19	VARIES	243
SLAB TRANSVERSE ENDS, TOP		5d6	-	-	-	-	-	-	11	VARIES	160	18	VARIES	268
SLAB, TRANSVERSE AT ABUTMENT		8e1	20	28'-4	1513	20	29'-2	1558	20	31'-9	1696	20	37'-6	2003
SLAB, TRANSVERSE AT ABUTMENT		8e2	20	23'-4	1246	20	24'-1	1287	20	26'-9	1429	20	32'-5	1732
SLAB, HAIRPINS, AT ABUTMENT		6e3	100	6'-10	1027	100	6'-11	1039	100	7'-3	1089	100	7'-11	1190
PIER CAP HOOPS		5h1	72	6'-11	520	72	6'-11	520	90	6'-11	650	108	6'-11	780
PIER CAP ENDS		8h2	4	14'-5	154	4	14'-5	154	4	14'-5	154	4	14'-5	154
PIER CAP, BOTTOM LONGITUDINAL		8h3	8	27'-5	586	8	28'-8	613	8	31'-8	677	8	37'-10	809
PIER CAP, BOTTOM LONGITUDINAL		8h4	8	21'-11	469	8	22'-4	478	8	24'-6	524	8	29'-8	634
PIER CAP, TOP LONGITUDINAL		8h5	4	28'-2	301	4	29'-6	316	4	32'-8	349	4	38'-11	416
PIER CAP, TOP LONGITUDINAL		8h6	4	23'-5	251	4	23'-11	256	4	26'-3	281	4	31'-6	337
TOP OF SLAB, TRANSVERSE, AT RAIL		5j1	132	8'-6	1171	132	8'-6	1171	126	8'-6	1118	124	8'-6	1100
WING, VERTICAL		5m1-4	32	SHOWN	117	32	SHOWN	117	32	SHOWN	117	32	SHOWN	117
WING, HORIZONTAL		5n1	24	6'-8	167	24	6'-8	167	24	6'-8	167	24	6'-8	167
PAVING SUPPORT, TRANSVERSE		5p1	44	8'-10	406	46	8'-10	424	50	8'-10	461	62	8'-10	572
PAVING SUPPORT LONGITUDINAL		5p3	6	24'-9	155	6	26'-1	164	6	28'-9	180	6	34'-7	217
PAVING SUPPORT LONGITUDINAL		5p4	6	22'-0	138	6	22'-10	143	6	25'-5	160	6	31'-1	195
SUB TOTAL - LBS.					45,800			46,284			47,209			48,522
BARRIER RAIL - SEE LIST ON RAIL SHEET J44-46-06					4649			4649			4649			4649
OPEN RAIL - SEE LIST ON RAIL SHEET J44-49-06					4601			4601			4601			4601
TOTAL - LBS. WITH MONOLITHIC PIER CAP		WITH BARRIER RAIL			50,449			50,933			51,858			53,171
		WITH OPEN RAIL			50,401			50,885			51,810			53,123
TOTAL - LBS. WITH NON-MONOLITHIC PIER CAP		WITH BARRIER RAIL			48,168			48,596			49,223			50,041
SAME AS ABOVE EXCEPT ALL "h" BARS DELETED		WITH OPEN RAIL			48,120			48,548			49,175			49,993

ESTIMATED QUANTITIES FOR SUPERSTRUCTURE - 70' BRIDGE

ITEM		SKEW	WITH MONOLITHIC PIER CAP 0°	15°	30°	45°	WITH NON-MONOLITHIC PIER CAP 0°	15°	30°	45°
WITH BARRIER RAIL	*STRUCTURAL CONCRETE (BRIDGE)	C.Y.	195.2	196.8	202.0	213.4	188.8	190.2	194.7	204.5
	REINFORCING STEEL EPOXY COATED	LBS.	50,449	50,933	51,858	53,171	48,168	48,596	49,223	50,041
	CONCRETE BARRIER OR OPEN RAIL	LIN. FT.	162.0	162.2	162.9	164.5	162.0	162.2	162.9	164.5
WITH OPEN RAIL	*STRUCTURAL CONCRETE (BRIDGE)	C.Y.	195.1	196.6	201.9	213.3	188.7	190.0	194.6	204.4
	REINFORCING STEEL EPOXY COATED	LBS.	50,401	50,885	51,810	53,123	48,120	48,548	49,175	49,993

* INCLUDES 4 WINGS @ 0.71 C.Y. EACH; EXCLUDES RAIL CONCRETE.

BENT BAR DETAILS

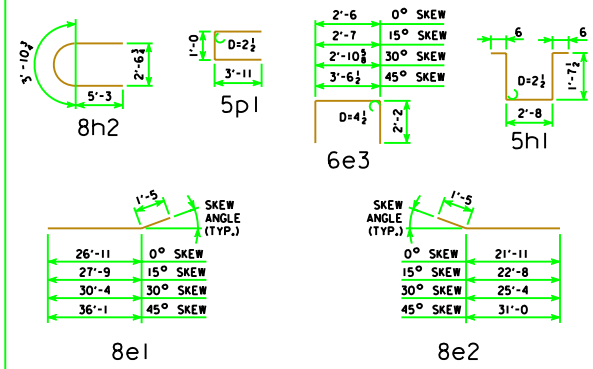

NOTE: ALL DIMENSIONS ARE OUT TO OUT. D = PIN DIAMETER.

NOTES:

ALL REINFORCING STEEL SHALL BE EPOXY COATED.

THE TRANSVERSE REBARS ARE DETAILED WITH A SPLICE LAP. AT THE CONTRACTOR'S OPTION, THIS LAP MAY BE ELIMINATED BY FURNISHING FULL LENGTH BARS WITH NO REDUCTION IN PAY WEIGHT FOR SAME.

LATEST REVISION DATE

APPROVED BY BRIDGE ENGINEER

Iowa Department of Transportation
Highway Division

STANDARD DESIGN - 44' ROADWAY, 3 SPAN BRIDGES

CONTINUOUS CONCRETE SLAB BRIDGES

NOVEMBER, 2006

SUPERSTRUCTURE DETAILS
70'-0 BRIDGE

J44-03-06