BILL OF REINFORCING STEEL FOR SUPERSTRUCTURE - 130' BRIDGE

LOCATION	SHAPE	BAR	0° NO.	0° LENGTH	0° WEIGHT	15° NO.	15° LENGTH	15° WEIGHT	30° NO.	30° LENGTH	30° WEIGHT	45° NO.	45° LENGTH	45° WEIGHT
SLAB LONGITUDINAL BOTTOM		9a1	58	29'-10	5884	58	29'-10	5884	58	29'-10	5884	58	29'-10	5884
SLAB LONGITUDINAL BOTTOM		9a2	58	44'-6	8776	58	44'-6	8776	58	44'-6	8776	58	44'-6	8776
SLAB LONGITUDINAL BOTTOM		9a3	58	41'-3	8135	58	41'-3	8135	58	41'-3	8135	58	41'-3	8135
SLAB LONGITUDINAL BOTTOM		9a4	58	33'-10	6672	58	33'-10	6672	58	33'-10	6672	58	33'-10	6672
SLAB LONGITUDINAL BOTTOM		10a5	29	41'-0	5117	29	41'-0	5117	29	41'-0	5117	29	41'-0	5117
SLAB LONGITUDINAL BOTTOM, AT RAIL		9a6	8	39'-8	1079	8	39'-8	1079	8	39'-8	1079	8	39'-8	1079
SLAB LONGITUDINAL BOTTOM, AT RAIL		9a7	8	13'-0	354	8	13'-0	354	8	13'-0	354	8	13'-0	354
SLAB LONGITUDINAL BOTTOM, AT RAIL		9a8	4	48'-8	662	4	48'-8	662	4	48'-8	662	4	48'-8	662
SLAB LONGITUDINAL BOTTOM, AT RAIL		8a9	8	32'-4	691	8	32'-4	691	8	32'-4	691	8	32'-4	691
SLAB LONGITUDINAL BOTTOM, AT RAIL		9a10	4	29'-0	395	4	29'-0	395	4	29'-0	395	4	29'-0	395
SLAB LONGITUDINAL TOP		6b1	58	6'-7	574	58	6'-7	574	58	6'-7	574	58	6'-7	574
SLAB LONGITUDINAL TOP		11b2	58	28'-9	8860	58	28'-9	8860	58	28'-9	8860	58	28'-9	8860
SLAB LONGITUDINAL TOP		11b3	58	30'-6	9399	58	30'-6	9399	58	30'-6	9399	58	30'-6	9399
SLAB LONGITUDINAL TOP		7b4	58	22'-7	2678	58	22'-7	2678	58	22'-7	2678	58	22'-7	2678
SLAB LONGITUDINAL TOP		10b5	58	25'-6	6365	58	25'-6	6365	58	25'-6	6365	58	25'-6	6365
SLAB LONGITUDINAL TOP		6b6	29	34'-4	1496	29	34'-4	1496	29	34'-4	1496	29	34'-4	1496
SLAB LONGITUDINAL TOP, AT RAIL		6b8	8	29'-1	350	8	29'-1	350	8	29'-1	350	8	29'-1	350
SLAB LONGITUDINAL TOP, AT RAIL		11b9	8	32'-9	1393	8	32'-9	1393	8	32'-9	1393	8	32'-9	1393
SLAB LONGITUDINAL TOP, AT RAIL		6b10	4	23'-0	139	4	23'-0	139	4	23'-0	139	4	23'-0	139
SLAB LONGITUDINAL TOP, AT RAIL		7b11	8	34'-4	562	8	34'-4	562	8	34'-4	562	8	34'-4	562
SLAB LONGITUDINAL TOP, AT RAIL		11b12	8	23'-9	1010	8	23'-9	1010	8	23'-9	1010	8	23'-9	1010
SLAB TRANSVERSE BOTTOM		6c1	127	25'-5	4849	127	26'-4	5024	118	25'-5	4505	108	25'-5	4123
SLAB TRANSVERSE BOTTOM		6c2	127	23'-3	4436	127	24'-1	4594	119	23'-3	4156	110	23'-3	3842
SLAB TRANSVERSE ENDS, BOTTOM		6c3	-	-	-	-	-	-	12	VARIES	267	20	VARIES	459
SLAB TRANSVERSE ENDS, BOTTOM		6c4	-	-	-	-	-	-	11	VARIES	255	20	VARIES	434
SLAB TRANSVERSE ENDS, BOTTOM		6c5	-	-	-	-	-	-	11	VARIES	213	19	VARIES	350
SLAB TRANSVERSE ENDS, BOTTOM		6c6	-	-	-	-	-	-	11	VARIES	230	18	VARIES	386
SLAB TRANSVERSE TOP		5d1	127	25'-9	3411	127	26'-8	3533	118	25'-9	3170	108	25'-9	2901
SLAB TRANSVERSE TOP		5d2	127	23'-3	3080	127	24'-1	3191	119	23'-3	2886	110	23'-3	2668
SLAB TRANSVERSE ENDS, TOP		5d3	-	-	-	-	-	-	12	VARIES	186	20	VARIES	319
SLAB TRANSVERSE ENDS, TOP		5d4	-	-	-	-	-	-	11	VARIES	177	20	VARIES	301
SLAB TRANSVERSE ENDS, TOP		5d5	-	-	-	-	-	-	11	VARIES	148	19	VARIES	243
SLAB TRANSVERSE ENDS, TOP		5d6	-	-	-	-	-	-	11	VARIES	160	18	VARIES	268
SLAB, TRANSVERSE AT ABUTMENT		8e1	20	28'-4	1513	20	29'-2	1558	20	31'-9	1696	20	37'-6	2003
SLAB, TRANSVERSE AT ABUTMENT		8e2	20	23'-4	1246	20	24'-1	1287	20	26'-9	1429	20	32'-5	1732
SLAB, HAIRPINS, AT ABUTMENT		6e3	100	6'-10	1027	100	6'-11	1039	100	7'-3	1089	100	7'-11	1190
PIER CAP HOOPS		5h1	84	8'-1	709	84	8'-1	709	84	8'-1	709	112	8'-1	945
PIER CAP ENDS		8h2	4	14'-5	154	4	14'-5	154	4	14'-5	154	4	14'-5	154
PIER CAP, BOTTOM LONGITUDINAL		8h3	8	27'-5	586	8	28'-8	613	8	31'-8	677	8	37'-10	809
PIER CAP, BOTTOM LONGITUDINAL		8h4	8	21'-11	469	8	22'-4	478	8	24'-6	524	8	29'-8	634
PIER CAP, TOP LONGITUDINAL		8h5	4	28'-2	301	4	29'-6	316	4	32'-8	349	4	38'-11	416
PIER CAP, TOP LONGITUDINAL		8h6	4	23'-5	251	4	23'-11	256	4	26'-3	281	4	31'-6	337
TOP OF SLAB, TRANSVERSE, AT RAIL		5j1	252	8'-6	2235	252	8'-6	2235	246	8'-6	2181	244	8'-6	2164
WING, VERTICAL		5m1-4	32	SHOWN	117	32	SHOWN	117	32	SHOWN	117	32	SHOWN	117
WING, HORIZONTAL		5n1	24	6'-8	167	24	6'-8	167	24	6'-8	167	24	6'-8	167
PAVING SUPPORT, TRANSVERSE		5p1	44	8'-10	406	46	8'-10	424	50	8'-10	461	62	8'-10	572
PAVING SUPPORT LONGITUDINAL		5p3	6	24'-9	155	6	26'-1	164	6	28'-9	180	6	34'-7	217
PAVING SUPPORT LONGITUDINAL		5p4	6	22'-0	138	6	22'-10	143	6	25'-5	160	6	31'-1	195
SUB TOTAL - LBS.					95,841			96,593			97,118			98,537
BARRIER RAIL - SEE LIST ON RAIL SHEET J44-46-06					7746			7746			7746			7746
OPEN RAIL - SEE LIST ON RAIL SHEET J44-49-06					7764			7764			7764			7764
TOTAL - LBS. WITH MONOLITHIC PIER CAP		WITH BARRIER RAIL			103,587			104,339			104,864			106,283
		WITH OPEN RAIL			103,605			104,357			104,882			106,301
TOTAL - LBS. WITH NON-MONOLITHIC PIER CAP		WITH BARRIER RAIL			101,117			101,813			102,170			102,988
SAME AS ABOVE EXCEPT ALL "h" BARS DELETED		WITH OPEN RAIL			101,135			101,831			102,188			103,006

BENT BAR DETAILS

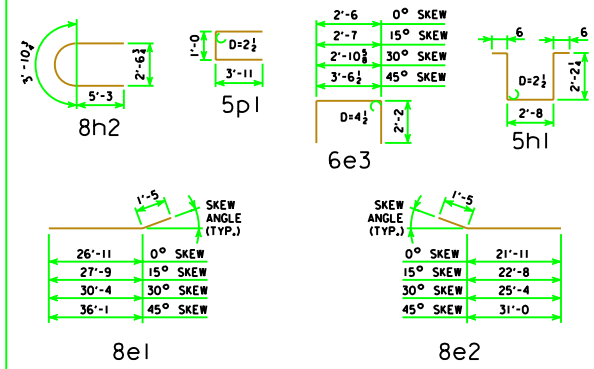

NOTE: ALL DIMENSIONS ARE OUT TO OUT. D = PIN DIAMETER.

NOTES:

ALL REINFORCING STEEL SHALL BE EPOXY COATED.

THE TRANSVERSE REBARS ARE DETAILED WITH A SPLICE LAP. AT THE CONTRACTOR'S OPTION, THIS LAP MAY BE ELIMINATED BY FURNISHING FULL LENGTH BARS WITH NO REDUCTION IN PAY WEIGHT FOR SAME.

ESTIMATED QUANTITIES FOR SUPERSTRUCTURE - 130' BRIDGE

ITEM		SKEW	WITH MONOLITHIC PIER CAP 0°	15°	30°	45°	WITH NON-MONOLITHIC PIER CAP 0°	15°	30°	45°
WITH BARRIER RAIL	*STRUCTURAL CONCRETE (BRIDGE)	C.Y.	446.8	448.2	453.1	463.7	440.4	441.6	445.8	454.8
	REINFORCING STEEL EPOXY COATED	LBS.	103,587	104,339	104,864	106,283	101,117	101,813	102,170	102,988
CONCRETE BARRIER OR OPEN RAIL		LIN. FT.	282.0	282.2	282.9	284.5	282.0	282.2	282.9	284.5
WITH OPEN RAIL	*STRUCTURAL CONCRETE (BRIDGE)	C.Y.	446.5	448.0	452.9	463.5	440.2	441.4	445.5	454.6
	REINFORCING STEEL EPOXY COATED	LBS.	103,605	104,357	104,882	106,301	101,135	101,831	102,188	103,006

* INCLUDES 4 WINGS @ 0.71 C.Y. EACH; EXCLUDES RAIL CONCRETE.

LATEST REVISION DATE

APPROVED BY BRIDGE ENGINEER

Iowa Department of Transportation
Highway Division

STANDARD DESIGN - 44' ROADWAY, 3 SPAN BRIDGES

CONTINUOUS CONCRETE SLAB BRIDGES

NOVEMBER, 2006

SUPERSTRUCTURE DETAILS
130'-0 BRIDGE

J44-15-06