BILL OF REINFORCING STEEL FOR SUPERSTRUCTURE - 120' BRIDGE

LOCATION	SHAPE	BAR	0° NO.	0° LENGTH	0° WEIGHT	15° NO.	15° LENGTH	15° WEIGHT	30° NO.	30° LENGTH	30° WEIGHT	45° NO.	45° LENGTH	45° WEIGHT
SLAB LONGITUDINAL BOTTOM		9a1	58	28'-1	5539	58	28'-1	5539	58	28'-1	5539	58	28'-1	5539
SLAB LONGITUDINAL BOTTOM		9a2	58	41'-3	8135	58	41'-3	8135	58	41'-3	8135	58	41'-3	8135
SLAB LONGITUDINAL BOTTOM		9a3	58	38'-9	7642	58	38'-9	7642	58	38'-9	7642	58	38'-9	7642
SLAB LONGITUDINAL BOTTOM		8a4	58	30'-4	4698	58	30'-4	4698	58	30'-4	4698	58	30'-4	4698
SLAB LONGITUDINAL BOTTOM		9a5	29	36'-6	3599	29	36'-6	3599	29	36'-6	3599	29	36'-6	3599
SLAB LONGITUDINAL BOTTOM, AT RAIL		9a6	8	37'-2	1011	8	37'-2	1011	8	37'-2	1011	8	37'-2	1011
SLAB LONGITUDINAL BOTTOM, AT RAIL		9a7	8	12'-0	327	8	12'-0	327	8	12'-0	327	8	12'-0	327
SLAB LONGITUDINAL BOTTOM, AT RAIL		9a8	4	45'-8	622	4	45'-8	622	4	45'-8	622	4	45'-8	622
SLAB LONGITUDINAL BOTTOM, AT RAIL		8a9	8	26'-7	568	8	26'-7	568	8	26'-7	568	8	26'-7	568
SLAB LONGITUDINAL BOTTOM, AT RAIL		8a10	4	25'-6	273	4	25'-6	273	4	25'-6	273	4	25'-6	273
SLAB LONGITUDINAL TOP		7b1	58	7'-10	929	58	7'-10	929	58	7'-10	929	58	7'-10	929
SLAB LONGITUDINAL TOP		10b2	58	29'-6	7363	58	29'-6	7363	58	29'-6	7363	58	29'-6	7363
SLAB LONGITUDINAL TOP		10b3	58	26'-9	6677	58	26'-9	6677	58	26'-9	6677	58	26'-9	6677
SLAB LONGITUDINAL TOP		7b4	58	22'-1	2619	58	22'-1	2619	58	22'-1	2619	58	22'-1	2619
SLAB LONGITUDINAL TOP		11b5	58	30'-3	9322	58	30'-3	9322	58	30'-3	9322	58	30'-3	9322
SLAB LONGITUDINAL TOP		6b6	29	28'-4	1235	29	28'-4	1235	29	28'-4	1235	29	28'-4	1235
SLAB LONGITUDINAL TOP, AT RAIL		6b8	8	27'-10	335	8	27'-10	335	8	27'-10	335	8	27'-10	335
SLAB LONGITUDINAL TOP, AT RAIL		10b9	8	29'-0	999	8	29'-0	999	8	29'-0	999	8	29'-0	999
SLAB LONGITUDINAL TOP, AT RAIL		6b10	4	23'-0	139	4	23'-0	139	4	23'-0	139	4	23'-0	139
SLAB LONGITUDINAL TOP, AT RAIL		6b11	8	30'-4	365	8	30'-4	365	8	30'-4	365	8	30'-4	365
SLAB LONGITUDINAL TOP, AT RAIL		11b12	8	23'-0	978	8	23'-0	978	8	23'-0	978	8	23'-0	978
SLAB TRANSVERSE BOTTOM		6c1	117	25'-5	4467	117	26'-4	4628	108	25'-5	4123	98	25'-5	3742
SLAB TRANSVERSE BOTTOM		6c2	117	23'-3	4086	117	24'-1	4233	109	23'-3	3807	100	23'-3	3493
SLAB TRANSVERSE ENDS, BOTTOM		6c3	-	-	-	-	-	-	12	VARIES	267	20	VARIES	459
SLAB TRANSVERSE ENDS, BOTTOM		6c4	-	-	-	-	-	-	11	VARIES	255	20	VARIES	434
SLAB TRANSVERSE ENDS, BOTTOM		6c5	-	-	-	-	-	-	11	VARIES	213	19	VARIES	350
SLAB TRANSVERSE ENDS, BOTTOM		6c6	-	-	-	-	-	-	11	VARIES	230	18	VARIES	386
SLAB TRANSVERSE TOP		5d1	117	25'-9	3143	117	26'-8	3255	108	25'-9	2901	98	25'-9	2633
SLAB TRANSVERSE TOP		5d2	117	23'-3	2838	117	24'-1	2939	109	23'-3	2644	100	23'-3	2425
SLAB TRANSVERSE ENDS, TOP		5d3	-	-	-	-	-	-	12	VARIES	186	20	VARIES	319
SLAB TRANSVERSE ENDS, TOP		5d4	-	-	-	-	-	-	11	VARIES	177	20	VARIES	301
SLAB TRANSVERSE ENDS, TOP		5d5	-	-	-	-	-	-	11	VARIES	148	19	VARIES	243
SLAB TRANSVERSE ENDS, TOP		5d6	-	-	-	-	-	-	11	VARIES	160	18	VARIES	268
SLAB, TRANSVERSE AT ABUTMENT		8e1	20	28'-4	1513	20	29'-2	1558	20	31'-9	1696	20	37'-6	2003
SLAB, TRANSVERSE AT ABUTMENT		8e2	20	23'-4	1246	20	24'-1	1287	20	26'-9	1429	20	32'-5	1732
SLAB, HAIRPINS, AT ABUTMENT		6e3	100	6'-10	1027	100	6'-11	1039	100	7'-3	1089	100	7'-11	1190
PIER CAP HOOPS		5h1	78	7'-10	638	78	7'-10	638	78	7'-10	638	104	7'-10	850
PIER CAP ENDS		8h2	4	14'-5	154	4	14'-5	154	4	14'-5	154	4	14'-5	154
PIER CAP, BOTTOM LONGITUDINAL		8h3	8	27'-5	586	8	28'-8	613	8	31'-8	677	8	37'-10	809
PIER CAP, BOTTOM LONGITUDINAL		8h4	8	21'-11	469	8	22'-4	478	8	24'-6	524	8	29'-8	634
PIER CAP, TOP LONGITUDINAL		8h5	4	28'-2	301	4	29'-6	316	4	32'-8	349	4	38'-11	416
PIER CAP, TOP LONGITUDINAL		8h6	4	23'-5	251	4	23'-11	256	4	26'-3	281	4	31'-6	337
TOP OF SLAB, TRANSVERSE, AT RAIL		5j1	232	8'-6	2057	232	8'-6	2057	226	8'-6	2004	224	8'-6	1986
WING, VERTICAL		5m1-4	32	SHOWN	117	32	SHOWN	117	32	SHOWN	117	32	SHOWN	117
WING, HORIZONTAL		5n1	24	6'-8	167	24	6'-8	167	24	6'-8	167	24	6'-8	167
PAVING SUPPORT, TRANSVERSE		5p1	44	8'-10	406	46	8'-10	424	50	8'-10	461	62	8'-10	572
PAVING SUPPORT LONGITUDINAL		5p3	6	24'-9	155	6	26'-1	164	6	28'-9	180	6	34'-7	217
PAVING SUPPORT LONGITUDINAL		5p4	6	22'-0	138	6	22'-10	143	6	25'-5	160	6	31'-1	195
SUB TOTAL - LBS.					87,134			87,841			88,412			89,807
BARRIER RAIL - SEE LIST ON RAIL SHEET J44-46-06					7228			7228			7228			7228
OPEN RAIL - SEE LIST ON RAIL SHEET J44-49-06					7340			7340			7340			7340
TOTAL - LBS. WITH MONOLITHIC PIER CAP		WITH BARRIER RAIL			94,362			95,069			95,640			97,035
		WITH OPEN RAIL			94,474			95,181			95,752			97,147
TOTAL - LBS. WITH NON-MONOLITHIC PIER CAP		WITH BARRIER RAIL			91,963			92,614			93,017			93,835
SAME AS ABOVE EXCEPT ALL "h" BARS DELETED		WITH OPEN RAIL			92,075			92,726			93,129			93,947

ESTIMATED QUANTITIES FOR SUPERSTRUCTURE - 120' BRIDGE

ITEM		SKEW	WITH MONOLITHIC PIER CAP 0°	15°	30°	45°	WITH NON-MONOLITHIC PIER CAP 0°	15°	30°	45°
WITH BARRIER RAIL	*STRUCTURAL CONCRETE (BRIDGE)	C.Y.	394.5	396.0	401.0	411.7	388.2	389.4	393.6	402.8
	REINFORCING STEEL EPOXY COATED	LBS.	94,362	95,069	95,640	97,035	91,963	92,614	93,017	93,835
CONCRETE BARRIER OR OPEN RAIL		LIN. FT.	262.0	262.2	262.9	264.5	262.0	262.2	262.9	264.5
WITH OPEN RAIL	*STRUCTURAL CONCRETE (BRIDGE)	C.Y.	394.3	395.8	400.7	411.5	387.9	389.2	393.4	402.6
	REINFORCING STEEL EPOXY COATED	LBS.	94,474	95,181	95,752	97,147	92,075	92,726	93,129	93,947

* INCLUDES 4 WINGS @ 0.71 C.Y. EACH; EXCLUDES RAIL CONCRETE.

BENT BAR DETAILS

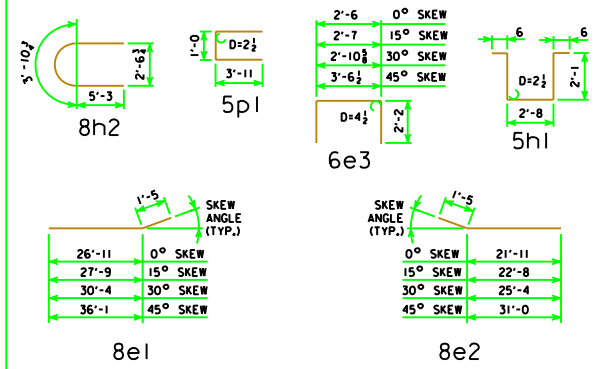

NOTE: ALL DIMENSIONS ARE OUT TO OUT. D = PIN DIAMETER.

NOTES:

ALL REINFORCING STEEL SHALL BE EPOXY COATED.

THE TRANSVERSE REBARS ARE DETAILED WITH A SPLICE LAP. AT THE CONTRACTOR'S OPTION, THIS LAP MAY BE ELIMINATED BY FURNISHING FULL LENGTH BARS WITH NO REDUCTION IN PAY WEIGHT FOR SAME.

LATEST REVISION DATE

APPROVED BY BRIDGE ENGINEER

Iowa Department of Transportation
Highway Division

STANDARD DESIGN - 44' ROADWAY, 3 SPAN BRIDGES

CONTINUOUS CONCRETE SLAB BRIDGES

NOVEMBER, 2006

SUPERSTRUCTURE DETAILS 120'-0 BRIDGE

J44-13-06