BILL OF REINFORCING STEEL FOR SUPERSTRUCTURE - 80' BRIDGE

LOCATION \ SKEW	SHAPE	BAR	0° NO.	0° LENGTH	0° WEIGHT	15° NO.	15° LENGTH	15° WEIGHT	30° NO.	30° LENGTH	30° WEIGHT	45° NO.	45° LENGTH	45° WEIGHT
SLAB LONGITUDINAL BOTTOM		8a1	53	19'-4	2736	53	19'-4	2736	53	19'-4	2736	53	19'-4	2736
SLAB LONGITUDINAL BOTTOM		8a2	53	27'-0	3821	53	27'-0	3821	53	27'-0	3821	53	27'-0	3821
SLAB LONGITUDINAL BOTTOM		8a3	53	29'-1	4116	53	29'-1	4116	53	29'-1	4116	53	29'-1	4116
SLAB LONGITUDINAL BOTTOM		7a4	52	24'-1	2560	52	24'-1	2560	52	24'-1	2560	52	24'-1	2560
SLAB LONGITUDINAL BOTTOM		7a5	26	24'-6	1303	26	24'-6	1303	26	24'-6	1303	26	24'-6	1303
SLAB LONGITUDINAL BOTTOM, AT RAIL		7a6	8	29'-10	488	8	29'-10	488	8	29'-10	488	8	29'-10	488
SLAB LONGITUDINAL BOTTOM, AT RAIL		7a7	4	29'-4	240	4	29'-4	240	4	29'-4	240	4	29'-4	240
SLAB LONGITUDINAL BOTTOM, AT RAIL		8a8	8	21'-10	467	8	21'-10	467	8	21'-10	467	8	21'-10	467
SLAB LONGITUDINAL BOTTOM, AT RAIL		8a9	4	25'-6	273	4	25'-6	273	4	25'-6	273	4	25'-6	273
SLAB LONGITUDINAL TOP		6b1	53	18'-4	1460	53	18'-4	1460	53	18'-4	1460	53	18'-4	1460
SLAB LONGITUDINAL TOP		9b2	53	21'-9	3920	53	21'-9	3920	53	21'-9	3920	53	21'-9	3920
SLAB LONGITUDINAL TOP		9b3	53	30'-10	5557	53	30'-10	5557	53	30'-10	5557	53	30'-10	5557
SLAB LONGITUDINAL TOP		6b4	52	6'-4	495	52	6'-4	495	52	6'-4	495	52	6'-4	495
SLAB LONGITUDINAL TOP		8b5	52	21'-3	2951	52	21'-3	2951	52	21'-3	2951	52	21'-3	2951
SLAB LONGITUDINAL TOP		6b6	26	16'-4	638	26	16'-4	638	26	16'-4	638	26	16'-4	638
SLAB LONGITUDINAL TOP, AT RAIL		6b8	8	24'-4	293	8	24'-4	293	8	24'-4	293	8	24'-4	293
SLAB LONGITUDINAL TOP, AT RAIL		9b9	8	23'-6	640	8	23'-6	640	8	23'-6	640	8	23'-6	640
SLAB LONGITUDINAL TOP, AT RAIL		8b10	8	32'-10	702	8	32'-10	702	8	32'-10	702	8	32'-10	702
SLAB TRANSVERSE BOTTOM		6c1	77	23'-5	2709	77	24'-3	2805	70	23'-5	2463	62	23'-5	2181
SLAB TRANSVERSE BOTTOM		6c2	77	21'-3	2458	77	22'-0	2545	71	21'-3	2267	64	21'-3	2043
SLAB TRANSVERSE ENDS, BOTTOM		6c3	-	-	-	-	-	-	11	VARIES	226	18	VARIES	386
SLAB TRANSVERSE ENDS, BOTTOM		6c4	-	-	-	-	-	-	10	VARIES	219	18	VARIES	363
SLAB TRANSVERSE ENDS, BOTTOM		6c5	-	-	-	-	-	-	10	VARIES	180	17	VARIES	288
SLAB TRANSVERSE ENDS, BOTTOM		6c6	-	-	-	-	-	-	10	VARIES	193	16	VARIES	319
SLAB TRANSVERSE TOP		5d1	77	23'-9	1908	77	24'-7	1975	70	23'-9	1734	62	23'-9	1536
SLAB TRANSVERSE TOP		5d2	77	21'-3	1707	77	22'-0	1767	71	21'-3	1574	64	21'-3	1419
SLAB TRANSVERSE ENDS, TOP		5d3	-	-	-	-	-	-	11	VARIES	157	18	VARIES	268
SLAB TRANSVERSE ENDS, TOP		5d4	-	-	-	-	-	-	10	VARIES	152	18	VARIES	252
SLAB TRANSVERSE ENDS, TOP		5d5	-	-	-	-	-	-	10	VARIES	125	17	VARIES	200
SLAB TRANSVERSE ENDS, TOP		5d6	-	-	-	-	-	-	10	VARIES	134	16	VARIES	222
SLAB, TRANSVERSE AT ABUTMENT		8e1	20	26'-4	1407	20	27'-1	1447	20	29'-6	1576	20	34'-8	1852
SLAB, TRANSVERSE AT ABUTMENT		8e2	20	21'-4	1140	20	22'-0	1175	20	24'-5	1304	20	29'-7	1580
SLAB, HAIRPINS, AT ABUTMENT		6e3	92	6'-10	945	92	6'-11	956	92	7'-3	1002	92	7'-11	1094
PIER CAP HOOPS		5h1	72	7'-1	532	72	7'-1	532	72	7'-1	532	108	7'-1	798
PIER CAP ENDS		8h2	4	14'-5	154	4	14'-5	154	4	14'-5	154	4	14'-5	154
PIER CAP, BOTTOM LONGITUDINAL		8h3	8	25'-5	543	8	26'-7	568	8	29'-4	627	8	35'-0	748
PIER CAP, BOTTOM LONGITUDINAL		8h4	8	19'-11	426	8	20'-3	433	8	22'-2	474	8	26'-10	574
PIER CAP, TOP LONGITUDINAL		8h5	4	26'-2	280	4	27'-5	293	4	30'-4	324	4	36'-1	386
PIER CAP, TOP LONGITUDINAL		8h6	4	21'-5	229	4	21'-10	234	4	23'-11	256	4	28'-8	307
TOP OF SLAB, TRANSVERSE, AT RAIL		5j1	152	8'-6	1348	152	8'-6	1348	146	8'-6	1295	144	8'-6	1277
WING, VERTICAL		5m1-4	32	SHOWN	117	32	SHOWN	117	32	SHOWN	117	32	SHOWN	117
WING, HORIZONTAL		5n1	24	6'-8	167	24	6'-8	167	24	6'-8	167	24	6'-8	167
PAVING SUPPORT, TRANSVERSE		5p1	40	8'-10	369	42	8'-10	387	46	8'-10	424	56	8'-10	516
PAVING SUPPORT LONGITUDINAL		5p3	6	22'-9	143	6	24'-0	151	6	26'-5	166	6	31'-9	199
PAVING SUPPORT LONGITUDINAL		5p4	6	20'-0	126	6	20'-9	130	6	23'-1	145	6	28'-3	177
SUB TOTAL - LBS.					49,368			49,844			50,647			52,083
BARRIER RAIL - SEE LIST ON RAIL SHEET J40-46-06					5156			5156			5156			5156
OPEN RAIL - SEE LIST ON RAIL SHEET J40-49-06					5261			5261			5261			5261
TOTAL - LBS. WITH MONOLITHIC PIER CAP		WITH BARRIER RAIL			54,524			55,000			55,803			57,239
		WITH OPEN RAIL			54,629			55,105			55,908			57,344
TOTAL - LBS. WITH NON-MONOLITHIC PIER CAP		WITH BARRIER RAIL			52,360			52,786			53,436			54,272
SAME AS ABOVE EXCEPT ALL "h" BARS DELETED		WITH OPEN RAIL			52,465			52,891			53,541			54,377

ESTIMATED QUANTITIES FOR SUPERSTRUCTURE - 80' BRIDGE

ITEM		SKEW	WITH MONOLITHIC PIER CAP 0°	15°	30°	45°	WITH NON-MONOLITHIC PIER CAP 0°	15°	30°	45°
WITH BARRIER RAIL	*STRUCTURAL CONCRETE (BRIDGE)	C.Y.	205.9	207.3	212.0	222.4	199.9	201.1	205.1	214.0
	REINFORCING STEEL EPOXY COATED	LBS.	54,524	55,000	55,803	57,239	52,360	52,786	53,436	54,272
	CONCRETE BARRIER OR OPEN RAIL	LIN. FT.	182.0	182.2	182.9	184.5	182.0	182.2	182.9	184.5
WITH OPEN RAIL	*STRUCTURAL CONCRETE (BRIDGE)	C.Y.	205.7	207.1	211.9	222.2	199.7	200.9	205.0	213.8
	REINFORCING STEEL EPOXY COATED	LBS.	54,629	55,105	55,908	57,344	52,465	52,891	53,541	54,377

* INCLUDES 4 WINGS @ 0.71 C.Y. EACH; EXCLUDES RAIL CONCRETE.

BENT BAR DETAILS

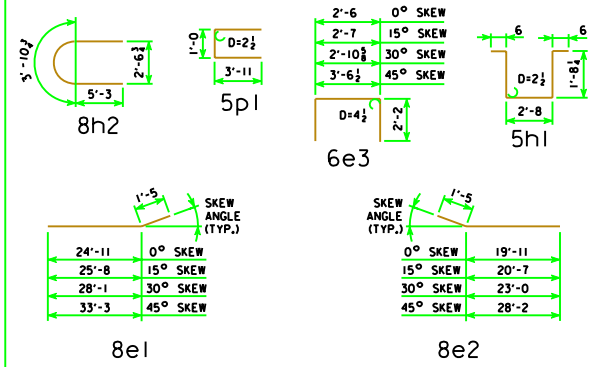

NOTE: ALL DIMENSIONS ARE OUT TO OUT. D = PIN DIAMETER.

NOTES:

ALL REINFORCING STEEL SHALL BE EPOXY COATED.

THE TRANSVERSE REBARS ARE DETAILED WITH A SPLICE LAP. AT THE CONTRACTOR'S OPTION, THIS LAP MAY BE ELIMINATED BY FURNISHING FULL LENGTH BARS WITH NO REDUCTION IN PAY WEIGHT FOR SAME.

LATEST REVISION DATE

APPROVED BY BRIDGE ENGINEER

Iowa Department of Transportation
Highway Division

STANDARD DESIGN - 40' ROADWAY, 3 SPAN BRIDGES

CONTINUOUS CONCRETE SLAB BRIDGES

NOVEMBER, 2006

SUPERSTRUCTURE DETAILS 80'-0 BRIDGE

J40-05-06