BILL OF REINFORCING STEEL FOR SUPERSTRUCTURE - 150' BRIDGE

LOCATION	SHAPE	BAR	0° NO.	0° LENGTH	0° WEIGHT	15° NO.	15° LENGTH	15° WEIGHT	30° NO.	30° LENGTH	30° WEIGHT	45° NO.	45° LENGTH	45° WEIGHT
SLAB LONGITUDINAL BOTTOM		10a1	53	33'-10	7716	53	33'-10	7716	53	33'-10	7716	53	33'-10	7716
SLAB LONGITUDINAL BOTTOM		10a2	53	51'-6	11,746	53	51'-6	11,746	53	51'-6	11,746	53	51'-6	11,746
SLAB LONGITUDINAL BOTTOM		10a3	53	48'-6	11,061	53	48'-6	11,061	53	48'-6	11,061	53	48'-6	11,061
SLAB LONGITUDINAL BOTTOM		9a4	52	37'-4	6601	52	37'-4	6601	52	37'-4	6601	52	37'-4	6601
SLAB LONGITUDINAL BOTTOM		9a5	26	45'-0	3978	26	45'-0	3978	26	45'-0	3978	26	45'-0	3978
SLAB LONGITUDINAL BOTTOM, AT RAIL		9a6	8	45'-8	1243	8	45'-8	1243	8	45'-8	1243	8	45'-8	1243
SLAB LONGITUDINAL BOTTOM, AT RAIL		9a7	8	13'-0	354	8	13'-0	354	8	13'-0	354	8	13'-0	354
SLAB LONGITUDINAL BOTTOM, AT RAIL		9a8	4	56'-8	771	4	56'-8	771	4	56'-8	771	4	56'-8	771
SLAB LONGITUDINAL BOTTOM, AT RAIL		10a9	8	38'-7	1329	8	38'-7	1329	8	38'-7	1329	8	38'-7	1329
SLAB LONGITUDINAL BOTTOM, AT RAIL		10a10	4	35'-0	603	4	35'-0	603	4	35'-0	603	4	35'-0	603
SLAB LONGITUDINAL TOP		6b1	53	6'-7	525	53	6'-7	525	53	6'-7	525	53	6'-7	525
SLAB LONGITUDINAL TOP		11b2	53	32'-9	9223	53	32'-9	9223	53	32'-9	9223	53	32'-9	9223
SLAB LONGITUDINAL TOP		11b3	53	28'-6	8026	53	28'-6	8026	53	28'-6	8026	53	28'-6	8026
SLAB LONGITUDINAL TOP		8b4	53	32'-0	4529	53	32'-0	4529	53	32'-0	4529	53	32'-0	4529
SLAB LONGITUDINAL TOP		11b5	52	30'-0	8289	52	30'-0	8289	52	30'-0	8289	52	30'-0	8289
SLAB LONGITUDINAL TOP		6b6	26	37'-4	1458	26	37'-4	1458	26	37'-4	1458	26	37'-4	1458
SLAB LONGITUDINAL TOP, AT RAIL		6b8	8	33'-10	407	8	33'-10	407	8	33'-10	407	8	33'-10	407
SLAB LONGITUDINAL TOP, AT RAIL		11b9	8	35'-6	1509	8	35'-6	1509	8	35'-6	1509	8	35'-6	1509
SLAB LONGITUDINAL TOP, AT RAIL		6b10	4	28'-0	169	4	28'-0	169	4	28'-0	169	4	28'-0	169
SLAB LONGITUDINAL TOP, AT RAIL		7b11	8	39'-7	648	8	39'-7	648	8	39'-7	648	8	39'-7	648
SLAB LONGITUDINAL TOP, AT RAIL		11b12	8	25'-6	1084	8	25'-6	1084	8	25'-6	1084	8	25'-6	1084
SLAB TRANSVERSE BOTTOM		6c1	147	23'-5	5171	147	24'-3	5355	140	23'-5	4925	132	23'-5	4643
SLAB TRANSVERSE BOTTOM		6c2	147	21'-3	4692	147	22'-0	4858	141	21'-3	4501	134	21'-3	4277
SLAB TRANSVERSE ENDS, BOTTOM		6c3	-	-	-	-	-	-	11	VARIES	226	18	VARIES	386
SLAB TRANSVERSE ENDS, BOTTOM		6c4	-	-	-	-	-	-	10	VARIES	219	18	VARIES	363
SLAB TRANSVERSE ENDS, BOTTOM		6c5	-	-	-	-	-	-	10	VARIES	180	17	VARIES	288
SLAB TRANSVERSE ENDS, BOTTOM		6c6	-	-	-	-	-	-	10	VARIES	193	16	VARIES	319
SLAB TRANSVERSE TOP		5d1	147	23'-9	3642	147	24'-7	3770	140	23'-9	3468	132	23'-9	3270
SLAB TRANSVERSE TOP		5d2	147	21'-3	3259	147	22'-0	3374	141	21'-3	3126	134	21'-3	2970
SLAB TRANSVERSE ENDS, TOP		5d3	-	-	-	-	-	-	11	VARIES	157	18	VARIES	268
SLAB TRANSVERSE ENDS, TOP		5d4	-	-	-	-	-	-	10	VARIES	152	18	VARIES	252
SLAB TRANSVERSE ENDS, TOP		5d5	-	-	-	-	-	-	10	VARIES	125	17	VARIES	200
SLAB TRANSVERSE ENDS, TOP		5d6	-	-	-	-	-	-	10	VARIES	134	16	VARIES	222
SLAB, TRANSVERSE AT ABUTMENT		8e1	20	26'-4	1407	20	27'-1	1447	20	29'-6	1576	20	34'-8	1852
SLAB, TRANSVERSE AT ABUTMENT		8e2	20	21'-4	1140	20	22'-0	1175	20	24'-5	1304	20	29'-7	1580
SLAB, HAIRPINS, AT ABUTMENT		6e3	92	6'-10	945	92	6'-11	956	92	7'-3	1002	92	7'-11	1094
PIER CAP HOOPS		5h1	60	8'-6	532	60	8'-6	532	60	8'-6	532	90	8'-6	798
PIER CAP ENDS		8h2	4	14'-5	154	4	14'-5	154	4	14'-5	154	4	14'-5	154
PIER CAP, BOTTOM LONGITUDINAL		8h3	8	25'-5	543	8	26'-7	568	8	29'-4	627	8	35'-0	748
PIER CAP, BOTTOM LONGITUDINAL		8h4	8	19'-11	426	8	20'-3	433	8	22'-2	474	8	26'-10	574
PIER CAP, TOP LONGITUDINAL		8h5	4	26'-2	280	4	27'-5	293	4	30'-4	324	4	36'-1	386
PIER CAP, TOP LONGITUDINAL		8h6	4	21'-5	229	4	21'-10	234	4	23'-11	256	4	28'-8	307
TOP OF SLAB, TRANSVERSE, AT RAIL		5j1	292	8'-6	2589	292	8'-6	2589	286	8'-6	2536	284	8'-6	2518
WING, VERTICAL		5m1-4	32	SHOWN	117	32	SHOWN	117	32	SHOWN	117	32	SHOWN	117
WING, HORIZONTAL		5n1	24	6'-8	167	24	6'-8	167	24	6'-8	167	24	6'-8	167
PAVING SUPPORT, TRANSVERSE		5p1	40	8'-10	369	42	8'-10	387	46	8'-10	424	56	8'-10	516
PAVING SUPPORT LONGITUDINAL		5p3	6	22'-9	143	6	24'-0	151	6	26'-5	166	6	31'-9	199
PAVING SUPPORT LONGITUDINAL		5p4	6	20'-0	126	6	20'-9	130	6	23'-1	145	6	28'-3	177
SUB TOTAL - LBS.					107,200			107,959			108,479			109,914
BARRIER RAIL - SEE LIST ON RAIL SHEET J40-46-06					8853			8853			8853			8853
OPEN RAIL - SEE LIST ON RAIL SHEET J40-49-06					8675			8675			8675			8675
TOTAL - LBS. WITH MONOLITHIC PIER CAP		WITH BARRIER RAIL			116,053			116,812			117,332			118,767
		WITH OPEN RAIL			115,875			116,634			117,154			118,589
TOTAL - LBS. WITH NON-MONOLITHIC PIER CAP		WITH BARRIER RAIL			113,889			114,598			114,965			115,800
SAME AS ABOVE EXCEPT ALL "h" BARS DELETED		WITH OPEN RAIL			113,711			114,420			114,787			115,622

BENT BAR DETAILS

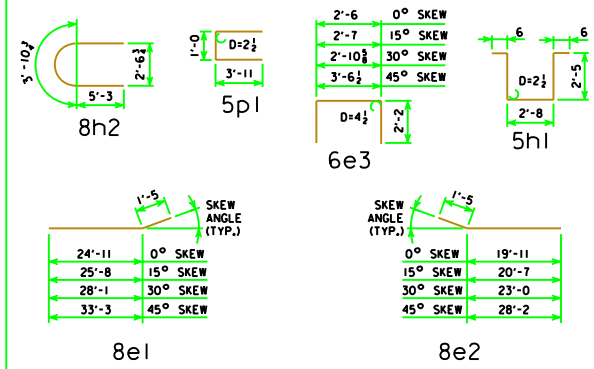

NOTE: ALL DIMENSIONS ARE OUT TO OUT. D = PIN DIAMETER.

NOTES:

ALL REINFORCING STEEL SHALL BE EPOXY COATED.

THE TRANSVERSE REBARS ARE DETAILED WITH A SPLICE LAP. AT THE CONTRACTOR'S OPTION, THIS LAP MAY BE ELIMINATED BY FURNISHING FULL LENGTH BARS WITH NO REDUCTION IN PAY WEIGHT FOR SAME.

ESTIMATED QUANTITIES FOR SUPERSTRUCTURE - 150' BRIDGE

ITEM		SKEW	WITH MONOLITHIC PIER CAP 0°	15°	30°	45°	WITH NON-MONOLITHIC PIER CAP 0°	15°	30°	45°
WITH BARRIER RAIL	*STRUCTURAL CONCRETE (BRIDGE)	C.Y.	519.6	520.9	525.2	534.6	513.6	514.7	518.3	526.2
	REINFORCING STEEL EPOXY COATED	LBS.	116,053	116,812	117,332	118,767	113,889	114,598	114,965	115,800
	CONCRETE BARRIER OR OPEN RAIL	LIN. FT.	322.0	322.2	322.9	324.5	322.0	322.2	322.9	324.5
WITH OPEN RAIL	*STRUCTURAL CONCRETE (BRIDGE)	C.Y.	519.3	520.6	524.9	534.3	513.3	514.4	518.0	526.0
	REINFORCING STEEL EPOXY COATED	LBS.	115,875	116,634	117,154	118,589	113,711	114,420	114,787	115,622

* INCLUDES 4 WINGS @ 0.71 C.Y. EACH; EXCLUDES RAIL CONCRETE.

LATEST REVISION DATE

APPROVED BY BRIDGE ENGINEER

Iowa Department of Transportation
Highway Division

STANDARD DESIGN - 40' ROADWAY, 3 SPAN BRIDGES

CONTINUOUS CONCRETE SLAB BRIDGES

NOVEMBER, 2006

SUPERSTRUCTURE DETAILS
150'-0 BRIDGE

J40-19-06