BILL OF REINFORCING STEEL FOR SUPERSTRUCTURE - 140' BRIDGE

LOCATION	SHAPE	BAR	0° NO.	0° LENGTH	0° WEIGHT	15° NO.	15° LENGTH	15° WEIGHT	30° NO.	30° LENGTH	30° WEIGHT	45° NO.	45° LENGTH	45° WEIGHT
SLAB LONGITUDINAL BOTTOM		9a1	53	31'-7	5692	53	31'-7	5692	53	31'-7	5692	53	31'-7	5692
SLAB LONGITUDINAL BOTTOM		10a2	53	48'-6	11,061	53	48'-6	11,061	53	48'-6	11,061	53	48'-6	11,061
SLAB LONGITUDINAL BOTTOM		9a3	53	43'-9	7884	53	43'-9	7884	53	43'-9	7884	53	43'-9	7884
SLAB LONGITUDINAL BOTTOM		10a4	52	36'-4	8130	52	36'-4	8130	52	36'-4	8130	52	36'-4	8130
SLAB LONGITUDINAL BOTTOM		9a5	26	43'-0	3802	26	43'-0	3802	26	43'-0	3802	26	43'-0	3802
SLAB LONGITUDINAL BOTTOM, AT RAIL		9a6	8	42'-8	1161	8	42'-8	1161	8	42'-8	1161	8	42'-8	1161
SLAB LONGITUDINAL BOTTOM, AT RAIL		9a7	8	13'-0	354	8	13'-0	354	8	13'-0	354	8	13'-0	354
SLAB LONGITUDINAL BOTTOM, AT RAIL		9a8	4	52'-8	717	4	52'-8	717	4	52'-8	717	4	52'-8	717
SLAB LONGITUDINAL BOTTOM, AT RAIL		9a9	8	35'-4	962	8	35'-4	962	8	35'-4	962	8	35'-4	962
SLAB LONGITUDINAL BOTTOM, AT RAIL		10a10	4	33'-0	568	4	33'-0	568	4	33'-0	568	4	33'-0	568
SLAB LONGITUDINAL TOP		6b1	53	6'-7	525	53	6'-7	525	53	6'-7	525	53	6'-7	525
SLAB LONGITUDINAL TOP		11b2	53	26'-0	7322	53	26'-0	7322	53	26'-0	7322	53	26'-0	7322
SLAB LONGITUDINAL TOP		11b3	53	31'-9	8941	53	31'-9	8941	53	31'-9	8941	53	31'-9	8941
SLAB LONGITUDINAL TOP		7b4	53	24'-4	2637	53	24'-4	2637	53	24'-4	2637	53	24'-4	2637
SLAB LONGITUDINAL TOP		11b5	52	29'-0	8013	52	29'-0	8013	52	29'-0	8013	52	29'-0	8013
SLAB LONGITUDINAL TOP		6b6	26	34'-4	1341	26	34'-4	1341	26	34'-4	1341	26	34'-4	1341
SLAB LONGITUDINAL TOP, AT RAIL		6b8	8	31'-7	380	8	31'-7	380	8	31'-7	380	8	31'-7	380
SLAB LONGITUDINAL TOP, AT RAIL		11b9	8	34'-0	1446	8	34'-0	1446	8	34'-0	1446	8	34'-0	1446
SLAB LONGITUDINAL TOP, AT RAIL		6b10	4	25'-6	154	4	25'-6	154	4	25'-6	154	4	25'-6	154
SLAB LONGITUDINAL TOP, AT RAIL		7b11	8	37'-1	607	8	37'-1	607	8	37'-1	607	8	37'-1	607
SLAB LONGITUDINAL TOP, AT RAIL		11b12	8	24'-3	1031	8	24'-3	1031	8	24'-3	1031	8	24'-3	1031
SLAB TRANSVERSE BOTTOM		6c1	137	23'-5	4819	137	24'-3	4991	130	23'-5	4573	122	23'-5	4291
SLAB TRANSVERSE BOTTOM		6c2	137	21'-3	4373	137	22'-0	4528	131	21'-3	4182	124	21'-3	3958
SLAB TRANSVERSE ENDS, BOTTOM		6c3	-	-	-	-	-	-	11	VARIES	226	18	VARIES	386
SLAB TRANSVERSE ENDS, BOTTOM		6c4	-	-	-	-	-	-	10	VARIES	219	18	VARIES	363
SLAB TRANSVERSE ENDS, BOTTOM		6c5	-	-	-	-	-	-	10	VARIES	180	17	VARIES	288
SLAB TRANSVERSE ENDS, BOTTOM		6c6	-	-	-	-	-	-	10	VARIES	193	16	VARIES	319
SLAB TRANSVERSE TOP		5d1	137	23'-9	3394	137	24'-7	3513	130	23'-9	3221	122	23'-9	3023
SLAB TRANSVERSE TOP		5d2	137	21'-3	3037	137	22'-0	3144	131	21'-3	2904	124	21'-3	2749
SLAB TRANSVERSE ENDS, TOP		5d3	-	-	-	-	-	-	11	VARIES	157	18	VARIES	268
SLAB TRANSVERSE ENDS, TOP		5d4	-	-	-	-	-	-	10	VARIES	152	18	VARIES	252
SLAB TRANSVERSE ENDS, TOP		5d5	-	-	-	-	-	-	10	VARIES	125	17	VARIES	200
SLAB TRANSVERSE ENDS, TOP		5d6	-	-	-	-	-	-	10	VARIES	134	16	VARIES	222
SLAB, TRANSVERSE AT ABUTMENT		8e1	20	26'-4	1407	20	27'-1	1447	20	29'-6	1576	20	34'-8	1852
SLAB, TRANSVERSE AT ABUTMENT		8e2	20	21'-4	1140	20	22'-0	1175	20	24'-5	1304	20	29'-7	1580
SLAB, HAIRPINS, AT ABUTMENT		6e3	92	6'-10	945	92	6'-11	956	92	7'-3	1002	92	7'-11	1094
PIER CAP HOOPS		5h1	60	8'-3	517	60	8'-3	517	60	8'-3	517	90	8'-3	775
PIER CAP ENDS		8h2	4	14'-5	154	4	14'-5	154	4	14'-5	154	4	14'-5	154
PIER CAP, BOTTOM LONGITUDINAL		8h3	8	25'-5	543	8	26'-7	568	8	29'-4	627	8	35'-0	748
PIER CAP, BOTTOM LONGITUDINAL		8h4	8	19'-11	426	8	20'-3	433	8	22'-2	474	8	26'-10	574
PIER CAP, TOP LONGITUDINAL		8h5	4	26'-2	280	4	27'-5	293	4	30'-4	324	4	36'-1	386
PIER CAP, TOP LONGITUDINAL		8h6	4	21'-5	229	4	21'-10	234	4	23'-11	256	4	28'-8	307
TOP OF SLAB, TRANSVERSE, AT RAIL		5j1	272	8'-6	2412	272	8'-6	2412	266	8'-6	2359	264	8'-6	2341
WING, VERTICAL		5m1-4	32	SHOWN	117	32	SHOWN	117	32	SHOWN	117	32	SHOWN	117
WING, HORIZONTAL		5n1	24	6'-8	167	24	6'-8	167	24	6'-8	167	24	6'-8	167
PAVING SUPPORT, TRANSVERSE		5p1	40	8'-10	369	42	8'-10	387	46	8'-10	424	56	8'-10	516
PAVING SUPPORT LONGITUDINAL		5p3	6	22'-9	143	6	24'-0	151	6	26'-5	166	6	31'-9	199
PAVING SUPPORT LONGITUDINAL		5p4	6	20'-0	126	6	20'-9	130	6	23'-1	145	6	28'-3	177
SUB TOTAL - LBS.					97,326			98,045			98,606			100,034
BARRIER RAIL - SEE LIST ON RAIL SHEET J40-46-06					8294			8294			8294			8294
OPEN RAIL - SEE LIST ON RAIL SHEET J40-49-06					8189			8189			8189			8189
TOTAL - LBS.	WITH MONOLITHIC PIER CAP	WITH BARRIER RAIL			105,620			106,339			106,900			108,328
		WITH OPEN RAIL			105,515			106,234			106,795			108,223
TOTAL - LBS.	WITH NON-MONOLITHIC PIER CAP	WITH BARRIER RAIL			103,471			104,140			104,548			105,384
SAME AS ABOVE EXCEPT ALL "h" BARS DELETED		WITH OPEN RAIL			103,366			104,035			104,443			105,279

ESTIMATED QUANTITIES FOR SUPERSTRUCTURE - 140' BRIDGE

ITEM		SKEW	WITH MONOLITHIC PIER CAP 0°	15°	30°	45°	WITH NON-MONOLITHIC PIER CAP 0°	15°	30°	45°
WITH BARRIER RAIL	*STRUCTURAL CONCRETE (BRIDGE)	C.Y.	460.2	461.5	465.9	475.5	454.2	455.3	459.0	467.1
	REINFORCING STEEL EPOXY COATED	LBS.	105,620	106,339	106,900	108,328	103,471	104,140	104,548	105,384
	CONCRETE BARRIER OR OPEN RAIL	LIN. FT.	302.0	302.2	302.9	304.5	302.0	302.2	302.9	304.5
WITH OPEN RAIL	*STRUCTURAL CONCRETE (BRIDGE)	C.Y.	460.0	461.3	465.7	475.2	453.9	455.0	458.8	466.9
	REINFORCING STEEL EPOXY COATED	LBS.	105,515	106,234	106,795	108,223	103,366	104,035	104,443	105,279

* INCLUDES 4 WINGS @ 0.71 C.Y. EACH; EXCLUDES RAIL CONCRETE.

BENT BAR DETAILS

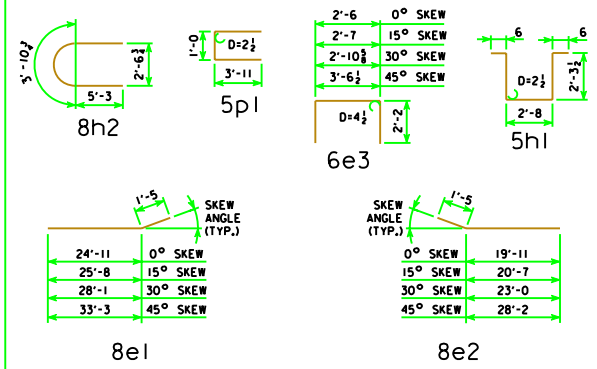

NOTE: ALL DIMENSIONS ARE OUT TO OUT. D = PIN DIAMETER.

NOTES:

ALL REINFORCING STEEL SHALL BE EPOXY COATED.

THE TRANSVERSE REBARS ARE DETAILED WITH A SPLICE LAP. AT THE CONTRACTOR'S OPTION, THIS LAP MAY BE ELIMINATED BY FURNISHING FULL LENGTH BARS WITH NO REDUCTION IN PAY WEIGHT FOR SAME.

LATEST REVISION DATE

APPROVED BY BRIDGE ENGINEER

Iowa Department of Transportation
Highway Division

STANDARD DESIGN - 40' ROADWAY, 3 SPAN BRIDGES

CONTINUOUS CONCRETE SLAB BRIDGES

NOVEMBER, 2006

SUPERSTRUCTURE DETAILS 140'-0 BRIDGE

J40-17-06