BILL OF REINFORCING STEEL FOR SUPERSTRUCTURE - 130' BRIDGE

LOCATION	SHAPE	BAR	0° NO.	0° LENGTH	0° WEIGHT	15° NO.	15° LENGTH	15° WEIGHT	30° NO.	30° LENGTH	30° WEIGHT	45° NO.	45° LENGTH	45° WEIGHT
SLAB LONGITUDINAL BOTTOM		9a1	53	29'-10	5376	53	29'-10	5376	53	29'-10	5376	53	29'-10	5376
SLAB LONGITUDINAL BOTTOM		9a2	53	44'-6	8019	53	44'-6	8019	53	44'-6	8019	53	44'-6	8019
SLAB LONGITUDINAL BOTTOM		9a3	53	41'-3	7434	53	41'-3	7434	53	41'-3	7434	53	41'-3	7434
SLAB LONGITUDINAL BOTTOM		9a4	52	33'-10	5982	52	33'-10	5982	52	33'-10	5982	52	33'-10	5982
SLAB LONGITUDINAL BOTTOM		10a5	26	41'-0	4587	26	41'-0	4587	26	41'-0	4587	26	41'-0	4587
SLAB LONGITUDINAL BOTTOM, AT RAIL		9a6	8	39'-8	1079	8	39'-8	1079	8	39'-8	1079	8	39'-8	1079
SLAB LONGITUDINAL BOTTOM, AT RAIL		9a7	8	13'-0	354	8	13'-0	354	8	13'-0	354	8	13'-0	354
SLAB LONGITUDINAL BOTTOM, AT RAIL		9a8	4	48'-8	662	4	48'-8	662	4	48'-8	662	4	48'-8	662
SLAB LONGITUDINAL BOTTOM, AT RAIL		8a9	8	32'-4	691	8	32'-4	691	8	32'-4	691	8	32'-4	691
SLAB LONGITUDINAL BOTTOM, AT RAIL		9a10	4	29'-0	395	4	29'-0	395	4	29'-0	395	4	29'-0	395
SLAB LONGITUDINAL TOP		6b1	53	6'-7	525	53	6'-7	525	53	6'-7	525	53	6'-7	525
SLAB LONGITUDINAL TOP		11b2	53	28'-9	8096	53	28'-9	8096	53	28'-9	8096	53	28'-9	8096
SLAB LONGITUDINAL TOP		11b3	53	30'-6	8589	53	30'-6	8589	53	30'-6	8589	53	30'-6	8589
SLAB LONGITUDINAL TOP		7b4	53	22'-7	2447	53	22'-7	2447	53	22'-7	2447	53	22'-7	2447
SLAB LONGITUDINAL TOP		10b5	52	25'-6	5706	52	25'-6	5706	52	25'-6	5706	52	25'-6	5706
SLAB LONGITUDINAL TOP		6b6	26	34'-4	1341	26	34'-4	1341	26	34'-4	1341	26	34'-4	1341
SLAB LONGITUDINAL TOP, AT RAIL		6b8	8	29'-1	350	8	29'-1	350	8	29'-1	350	8	29'-1	350
SLAB LONGITUDINAL TOP, AT RAIL		11b9	8	32'-9	1393	8	32'-9	1393	8	32'-9	1393	8	32'-9	1393
SLAB LONGITUDINAL TOP, AT RAIL		6b10	4	23'-0	139	4	23'-0	139	4	23'-0	139	4	23'-0	139
SLAB LONGITUDINAL TOP, AT RAIL		7b11	8	34'-4	562	8	34'-4	562	8	34'-4	562	8	34'-4	562
SLAB LONGITUDINAL TOP, AT RAIL		11b12	8	23'-9	1010	8	23'-9	1010	8	23'-9	1010	8	23'-9	1010
SLAB TRANSVERSE BOTTOM		6c1	127	23'-5	4467	127	24'-3	4626	120	23'-5	4221	112	23'-5	3940
SLAB TRANSVERSE BOTTOM		6c2	127	21'-3	4054	127	22'-0	4197	121	21'-3	3863	114	21'-3	3639
SLAB TRANSVERSE ENDS, BOTTOM		6c3	-	-	-	-	-	-	11	VARIES	226	18	VARIES	386
SLAB TRANSVERSE ENDS, BOTTOM		6c4	-	-	-	-	-	-	10	VARIES	219	18	VARIES	363
SLAB TRANSVERSE ENDS, BOTTOM		6c5	-	-	-	-	-	-	10	VARIES	180	17	VARIES	288
SLAB TRANSVERSE ENDS, BOTTOM		6c6	-	-	-	-	-	-	10	VARIES	193	16	VARIES	319
SLAB TRANSVERSE TOP		5d1	127	23'-9	3146	127	24'-7	3257	120	23'-9	2973	112	23'-9	2775
SLAB TRANSVERSE TOP		5d2	127	21'-3	2815	127	22'-0	2915	121	21'-3	2682	114	21'-3	2527
SLAB TRANSVERSE ENDS, TOP		5d3	-	-	-	-	-	-	11	VARIES	157	18	VARIES	268
SLAB TRANSVERSE ENDS, TOP		5d4	-	-	-	-	-	-	10	VARIES	152	18	VARIES	252
SLAB TRANSVERSE ENDS, TOP		5d5	-	-	-	-	-	-	10	VARIES	125	17	VARIES	200
SLAB TRANSVERSE ENDS, TOP		5d6	-	-	-	-	-	-	10	VARIES	134	16	VARIES	222
SLAB, TRANSVERSE AT ABUTMENT		8e1	20	26'-4	1407	20	27'-1	1447	20	29'-6	1576	20	34'-8	1852
SLAB, TRANSVERSE AT ABUTMENT		8e2	20	21'-4	1140	20	22'-0	1175	20	24'-5	1304	20	29'-7	1580
SLAB, HAIRPINS, AT ABUTMENT		6e3	92	6'-10	945	92	6'-11	956	92	7'-3	1002	92	7'-11	1094
PIER CAP HOOPS		5h1	52	8'-1	439	52	8'-1	439	78	8'-1	658	104	8'-1	877
PIER CAP ENDS		8h2	4	14'-5	154	4	14'-5	154	4	14'-5	154	4	14'-5	154
PIER CAP, BOTTOM LONGITUDINAL		8h3	8	25'-5	543	8	26'-7	568	8	29'-4	627	8	35'-0	748
PIER CAP, BOTTOM LONGITUDINAL		8h4	8	19'-11	426	8	20'-3	433	8	22'-2	474	8	26'-10	574
PIER CAP, TOP LONGITUDINAL		8h5	4	26'-2	280	4	27'-5	293	4	30'-4	324	4	36'-1	386
PIER CAP, TOP LONGITUDINAL		8h6	4	21'-5	229	4	21'-10	234	4	23'-11	256	4	28'-8	307
TOP OF SLAB, TRANSVERSE, AT RAIL		5j1	252	8'-6	2235	252	8'-6	2235	246	8'-6	2181	244	8'-6	2164
WING, VERTICAL		5m1-4	32	SHOWN	117	32	SHOWN	117	32	SHOWN	117	32	SHOWN	117
WING, HORIZONTAL		5n1	24	6'-8	167	24	6'-8	167	24	6'-8	167	24	6'-8	167
PAVING SUPPORT, TRANSVERSE		5p1	40	8'-10	369	42	8'-10	387	46	8'-10	424	56	8'-10	516
PAVING SUPPORT LONGITUDINAL		5p3	6	22'-9	143	6	24'-0	151	6	26'-5	166	6	31'-9	199
PAVING SUPPORT LONGITUDINAL		5p4	6	20'-0	126	6	20'-9	130	6	23'-1	145	6	28'-3	177
SUB TOTAL - LBS.					87,939			88,618			89,437			90,828
BARRIER RAIL - SEE LIST ON RAIL SHEET J40-46-06					7746			7746			7746			7746
OPEN RAIL - SEE LIST ON RAIL SHEET J40-49-06					7764			7764			7764			7764
TOTAL - LBS. WITH MONOLITHIC PIER CAP		WITH BARRIER RAIL			95,685			96,364			97,183			98,574
		WITH OPEN RAIL			95,703			96,382			97,201			98,592
TOTAL - LBS. WITH NON-MONOLITHIC PIER CAP		WITH BARRIER RAIL			93,614			94,243			94,690			95,528
SAME AS ABOVE EXCEPT ALL "h" BARS DELETED		WITH OPEN RAIL			93,632			94,261			94,708			95,546

ESTIMATED QUANTITIES FOR SUPERSTRUCTURE - 130' BRIDGE

ITEM		SKEW	WITH MONOLITHIC PIER CAP 0°	15°	30°	45°	WITH NON-MONOLITHIC PIER CAP 0°	15°	30°	45°
WITH BARRIER RAIL	*STRUCTURAL CONCRETE (BRIDGE)	C.Y.	409.1	410.4	414.9	424.6	403.1	404.2	408.0	416.2
	REINFORCING STEEL EPOXY COATED	LBS.	95,685	96,364	97,183	98,574	93,614	94,243	94,690	95,528
	CONCRETE BARRIER OR OPEN RAIL	LIN. FT.	282.0	282.2	282.9	284.5	282.0	282.2	282.9	284.5
WITH OPEN RAIL	*STRUCTURAL CONCRETE (BRIDGE)	C.Y.	408.9	410.2	414.6	424.3	402.8	403.9	407.7	415.9
	REINFORCING STEEL EPOXY COATED	LBS.	95,703	96,382	97,201	98,592	93,632	94,261	94,708	95,546

* INCLUDES 4 WINGS @ 0.71 C.Y. EACH; EXCLUDES RAIL CONCRETE.

BENT BAR DETAILS

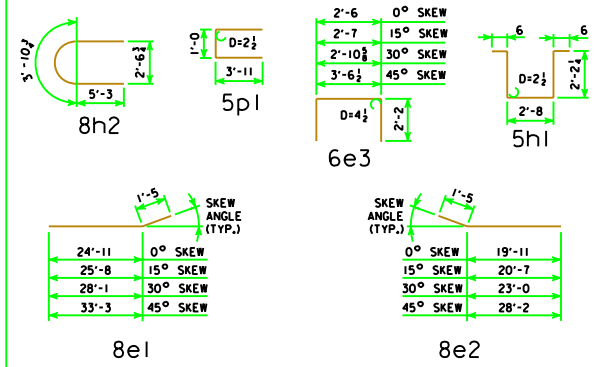

NOTE: ALL DIMENSIONS ARE OUT TO OUT. D = PIN DIAMETER.

NOTES:

ALL REINFORCING STEEL SHALL BE EPOXY COATED.

THE TRANSVERSE REBARS ARE DETAILED WITH A SPLICE LAP. AT THE CONTRACTOR'S OPTION, THIS LAP MAY BE ELIMINATED BY FURNISHING FULL LENGTH BARS WITH NO REDUCTION IN PAY WEIGHT FOR SAME.

LATEST REVISION DATE

APPROVED BY BRIDGE ENGINEER

Iowa Department of Transportation
Highway Division

STANDARD DESIGN - 40' ROADWAY, 3 SPAN BRIDGES

CONTINUOUS CONCRETE SLAB BRIDGES

NOVEMBER, 2006

SUPERSTRUCTURE DETAILS 130'-0 BRIDGE

J40-15-06