BILL OF REINFORCING STEEL FOR SUPERSTRUCTURE - 110' BRIDGE

LOCATION	SHAPE	BAR	0° NO.	0° LENGTH	0° WEIGHT	15° NO.	15° LENGTH	15° WEIGHT	30° NO.	30° LENGTH	30° WEIGHT	45° NO.	45° LENGTH	45° WEIGHT
SLAB LONGITUDINAL BOTTOM		8a1	53	25'-4	3585	53	25'-4	3585	53	25'-4	3585	53	25'-4	3585
SLAB LONGITUDINAL BOTTOM		9a2	53	38'-3	6893	53	38'-3	6893	53	38'-3	6893	53	38'-3	6893
SLAB LONGITUDINAL BOTTOM		8a3	53	34'-3	4847	53	34'-3	4847	53	34'-3	4847	53	34'-3	4847
SLAB LONGITUDINAL BOTTOM		9a4	52	32'-10	5805	52	32'-10	5805	52	32'-10	5805	52	32'-10	5805
SLAB LONGITUDINAL BOTTOM		8a5	26	41'-0	2847	26	41'-0	2847	26	41'-0	2847	26	41'-0	2847
SLAB LONGITUDINAL BOTTOM, AT RAIL		9a6	8	40'-4	1098	8	40'-4	1098	8	40'-4	1098	8	40'-4	1098
SLAB LONGITUDINAL BOTTOM, AT RAIL		9a7	4	42'-8	581	4	42'-8	581	4	42'-8	581	4	42'-8	581
SLAB LONGITUDINAL BOTTOM, AT RAIL		8a8	8	24'-10	531	8	24'-10	531	8	24'-10	531	8	24'-10	531
SLAB LONGITUDINAL BOTTOM, AT RAIL		8a9	4	24'-0	257	4	24'-0	257	4	24'-0	257	4	24'-0	257
SLAB LONGITUDINAL TOP		8b1	53	11'-10	1675	53	11'-10	1675	53	11'-10	1675	53	11'-10	1675
SLAB LONGITUDINAL TOP		10b2	53	28'-4	6462	53	28'-4	6462	53	28'-4	6462	53	28'-4	6462
SLAB LONGITUDINAL TOP		10b3	53	25'-7	5835	53	25'-7	5835	53	25'-7	5835	53	25'-7	5835
SLAB LONGITUDINAL TOP		7b4	53	20'-3	2194	53	20'-3	2194	53	20'-3	2194	53	20'-3	2194
SLAB LONGITUDINAL TOP		10b5	52	26'-6	5930	52	26'-6	5930	52	26'-6	5930	52	26'-6	5930
SLAB LONGITUDINAL TOP		6b6	26	27'-4	1068	26	27'-4	1068	26	27'-4	1068	26	27'-4	1068
SLAB LONGITUDINAL TOP, AT RAIL		6b8	8	25'-7	308	8	25'-7	308	8	25'-7	308	8	25'-7	308
SLAB LONGITUDINAL TOP, AT RAIL		10b9	8	27'-3	939	8	27'-3	939	8	27'-3	939	8	27'-3	939
SLAB LONGITUDINAL TOP, AT RAIL		6b10	4	21'-0	127	4	21'-0	127	4	21'-0	127	4	21'-0	127
SLAB LONGITUDINAL TOP, AT RAIL		6b11	8	29'-1	350	8	29'-1	350	8	29'-1	350	8	29'-1	350
SLAB LONGITUDINAL TOP, AT RAIL		10b12	8	19'-6	672	8	19'-6	672	8	19'-6	672	8	19'-6	672
SLAB TRANSVERSE BOTTOM		6c1	107	23'-5	3764	107	24'-3	3898	100	23'-5	3518	92	23'-5	3236
SLAB TRANSVERSE BOTTOM		6c2	107	21'-3	3416	107	22'-0	3536	101	21'-3	3224	94	21'-3	3001
SLAB TRANSVERSE ENDS, BOTTOM		6c3	-	-	-	-	-	-	11	VARIES	226	18	VARIES	386
SLAB TRANSVERSE ENDS, BOTTOM		6c4	-	-	-	-	-	-	10	VARIES	219	18	VARIES	363
SLAB TRANSVERSE ENDS, BOTTOM		6c5	-	-	-	-	-	-	10	VARIES	180	17	VARIES	288
SLAB TRANSVERSE ENDS, BOTTOM		6c6	-	-	-	-	-	-	10	VARIES	193	16	VARIES	319
SLAB TRANSVERSE TOP		5d1	107	23'-9	2651	107	24'-7	2744	100	23'-9	2478	92	23'-9	2279
SLAB TRANSVERSE TOP		5d2	107	21'-3	2372	107	22'-0	2456	101	21'-3	2239	94	21'-3	2084
SLAB TRANSVERSE ENDS, TOP		5d3	-	-	-	-	-	-	11	VARIES	157	18	VARIES	268
SLAB TRANSVERSE ENDS, TOP		5d4	-	-	-	-	-	-	10	VARIES	152	18	VARIES	252
SLAB TRANSVERSE ENDS, TOP		5d5	-	-	-	-	-	-	10	VARIES	125	17	VARIES	200
SLAB TRANSVERSE ENDS, TOP		5d6	-	-	-	-	-	-	10	VARIES	134	16	VARIES	222
SLAB, TRANSVERSE AT ABUTMENT		8e1	20	26'-4	1407	20	27'-1	1447	20	29'-6	1576	20	34'-8	1852
SLAB, TRANSVERSE AT ABUTMENT		8e2	20	21'-4	1140	20	22'-0	1175	20	24'-5	1304	20	29'-7	1580
SLAB, HAIRPINS, AT ABUTMENT		6e3	92	6'-10	945	92	6'-11	956	92	7'-3	1002	92	7'-11	1094
PIER CAP HOOPS		5h1	66	7'-7	523	66	7'-7	523	88	7'-7	697	88	7'-7	697
PIER CAP ENDS		8h2	4	14'-5	154	4	14'-5	154	4	14'-5	154	4	14'-5	154
PIER CAP, BOTTOM LONGITUDINAL		8h3	8	25'-5	543	8	26'-7	568	8	29'-4	627	8	35'-0	748
PIER CAP, BOTTOM LONGITUDINAL		8h4	8	19'-11	426	8	20'-3	433	8	22'-2	474	8	26'-10	574
PIER CAP, TOP LONGITUDINAL		8h5	4	26'-2	280	4	27'-5	293	4	30'-4	324	4	36'-1	386
PIER CAP, TOP LONGITUDINAL		8h6	4	21'-5	229	4	21'-10	234	4	23'-11	256	4	28'-8	307
TOP OF SLAB, TRANSVERSE, AT RAIL		5j1	212	8'-6	1880	212	8'-6	1880	206	8'-6	1827	204	8'-6	1809
WING, VERTICAL		5m1-4	32	SHOWN	117	32	SHOWN	117	32	SHOWN	117	32	SHOWN	117
WING, HORIZONTAL		5n1	24	6'-8	167	24	6'-8	167	24	6'-8	167	24	6'-8	167
PAVING SUPPORT, TRANSVERSE		5p1	40	8'-10	369	42	8'-10	387	46	8'-10	424	56	8'-10	516
PAVING SUPPORT LONGITUDINAL		5p3	6	22'-9	143	6	24'-0	151	6	26'-5	166	6	31'-9	199
PAVING SUPPORT LONGITUDINAL		5p4	6	20'-0	126	6	20'-9	130	6	23'-1	145	6	28'-3	177
SUB TOTAL - LBS.					72,656			73,253			74,109			75,279
BARRIER RAIL - SEE LIST ON RAIL SHEET J40-46-06					6654			6654			6654			6654
OPEN RAIL - SEE LIST ON RAIL SHEET J40-49-06					6606			6606			6606			6606
TOTAL - LBS. WITH MONOLITHIC PIER CAP		WITH BARRIER RAIL			79,310			79,907			80,763			81,933
		WITH OPEN RAIL			79,262			79,859			80,715			81,885
TOTAL - LBS. WITH NON-MONOLITHIC PIER CAP		WITH BARRIER RAIL			77,155			77,702			78,231			79,067
SAME AS ABOVE EXCEPT ALL "h" BARS DELETED		WITH OPEN RAIL			77,107			77,654			78,183			79,019

ESTIMATED QUANTITIES FOR SUPERSTRUCTURE - 110' BRIDGE

ITEM		SKEW	WITH MONOLITHIC PIER CAP 0°	15°	30°	45°	WITH NON-MONOLITHIC PIER CAP 0°	15°	30°	45°
WITH BARRIER RAIL	*STRUCTURAL CONCRETE (BRIDGE)	C.Y.	313.2	314.6	319.2	329.2	307.2	308.4	312.3	320.8
	REINFORCING STEEL EPOXY COATED	LBS.	79,310	79,907	80,763	81,933	77,155	77,702	78,231	79,067
	CONCRETE BARRIER OR OPEN RAIL	LIN. FT.	242.0	242.2	242.9	244.5	242.0	242.2	242.9	244.5
WITH OPEN RAIL	*STRUCTURAL CONCRETE (BRIDGE)	C.Y.	313.0	314.4	319.0	329.0	307.0	308.2	312.1	320.6
	REINFORCING STEEL EPOXY COATED	LBS.	79,262	79,859	80,715	81,885	77,107	77,654	78,183	79,019

* INCLUDES 4 WINGS @ 0.71 C.Y. EACH; EXCLUDES RAIL CONCRETE.

BENT BAR DETAILS

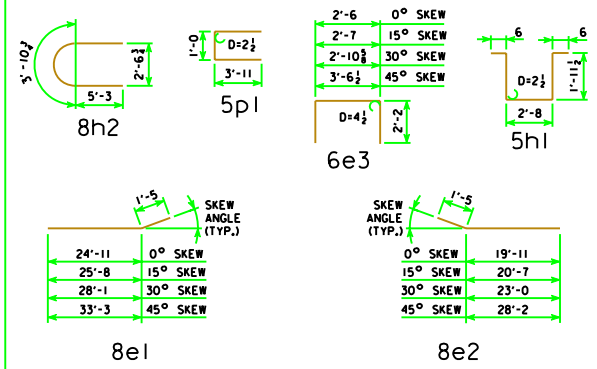

NOTE: ALL DIMENSIONS ARE OUT TO OUT. D = PIN DIAMETER.

NOTES:

ALL REINFORCING STEEL SHALL BE EPOXY COATED.

THE TRANSVERSE REBARS ARE DETAILED WITH A SPLICE LAP. AT THE CONTRACTOR'S OPTION, THIS LAP MAY BE ELIMINATED BY FURNISHING FULL LENGTH BARS WITH NO REDUCTION IN PAY WEIGHT FOR SAME.

LATEST REVISION DATE

APPROVED BY BRIDGE ENGINEER

Iowa Department of Transportation
Highway Division

STANDARD DESIGN - 40' ROADWAY, 3 SPAN BRIDGES

CONTINUOUS CONCRETE SLAB BRIDGES

NOVEMBER, 2006

SUPERSTRUCTURE DETAILS
110'-0 BRIDGE

J40-11-06