REINFORCING STEEL USED IN CONSTRUCTION OF "BEVELED PIPE AND GUARD" SHALL BE DEFORMED BARS MEETING THE REQUIREMENTS OF ARTICLE 4151.03. ALL STEEL BARS SHALL BE HOT-DIP GALVANIZED IN ACCORDANCE WITH ASTM A 123 SPECIFICATIONS.

CONCRETE USED IN THE CONSTRUCTION OF BEVELED PIPE AND GUARD SHALL BE CLASS 'C' CONCRETE.

THE CORRUGATED METAL PIPE SHALL BE CUT TO FIT THE 8:1 FORESLOPE. SLOTS SHALL BE CUT INTO THE CMP FOR PLACEMENT OF THE NO. 8 BARS. AFTER THE FORESLOPE HAS BEEN PLACED, THE NO. 8 BARS SHALL BE FITTED INTO THE SLOTS CUT IN THE CMP SO THEY WILL BE IN PROPER POSITION WHEN THE CONCRETE COLLAR IS POURED.

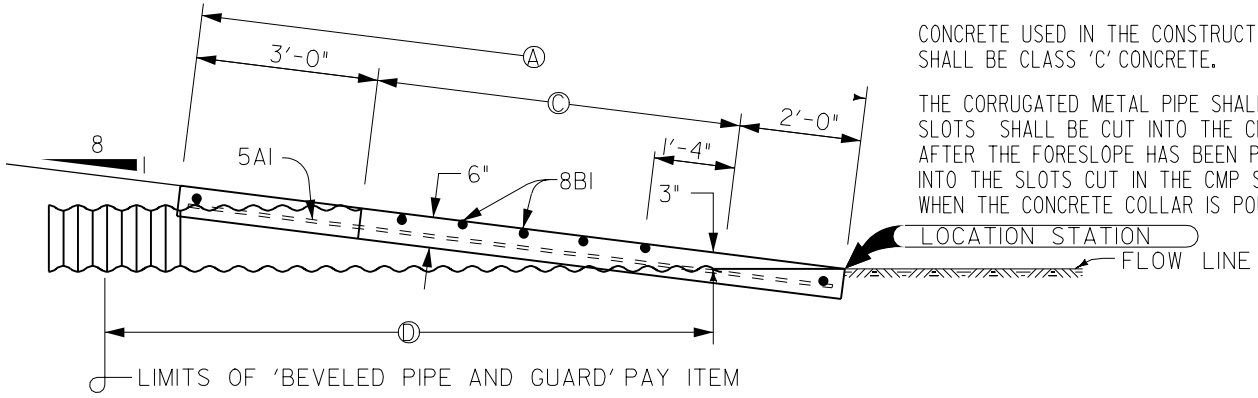

SECTION A-A

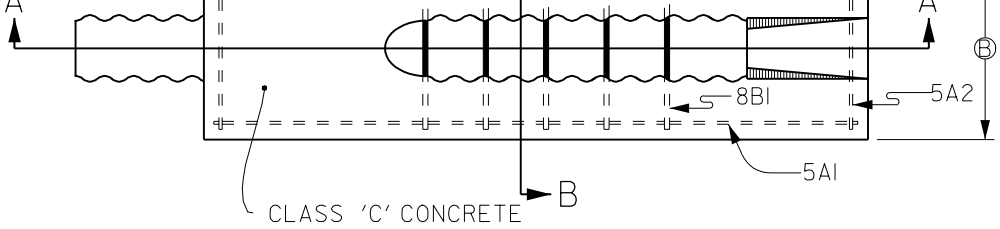

PLAN VIEW

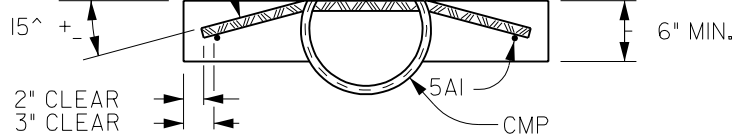

SECTION B-B

TABLE OF DIMENSIONS				
PIPE SIZE	A	B	C	D
12"	11'-0"	3'-0"	6'-0"	10'-0"
15"	13'-2"	3'-3"	8'-2"	12'-0"
18"	15'-4"	3'-6"	10'-4"	14'-10"

REINFORCING BAR LIST									
PIPE SIZE	BAR	LOCATION	SHAPE	NO.	LENGTH	LIN. FT.	WEIGHT	TOTAL WEIGHT	SPACING
12"	5A1	BASE		2	10'-8"	21.4	14.3	55.8	SEE DETAIL
	5A2	BASE		2	2'-8"	5.4	3.6		SEE DETAIL
	8B1	BASE		5	2'-10"	14.2	37.9		12"
15"	5A1	BASE		2	12'-10"	25.7	17.2	78.8	SEE DETAIL
	5A2	BASE		2	2'-11"	5.9	3.9		SEE DETAIL
	8B1	BASE		7	3'-1"	21.6	57.7		12"
18"	5A1	BASE		2	15'-0"	30.0	20.0	104.4	SEE DETAIL
	5A2	BASE		2	3'-2"	6.4	4.3		SEE DETAIL
	8B1	BASE		9	3'-4"	30.0	80.1		12"

REV.	DATE	BY

DATE: 01-01-98

DETAILS OF BEVELED PIPE AND GUARD

FIGURE: 4020.8

SHEET 1 OF 1