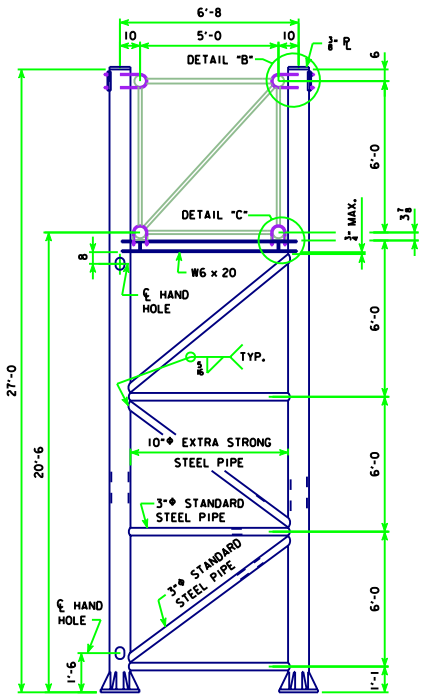

END VIEW OF TRUSS SUPPORT

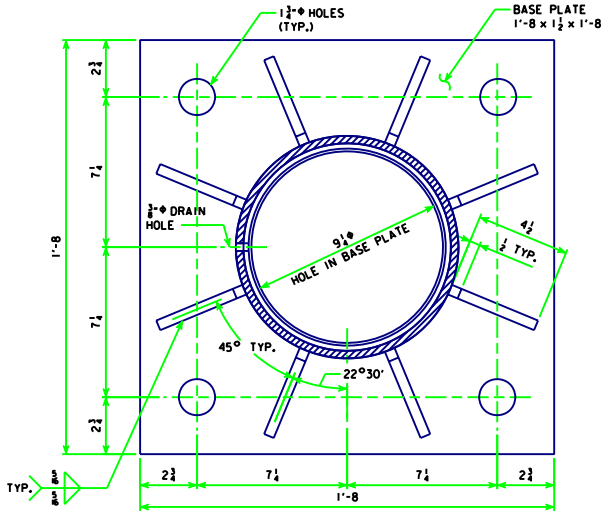

BASE PLATE PLAN

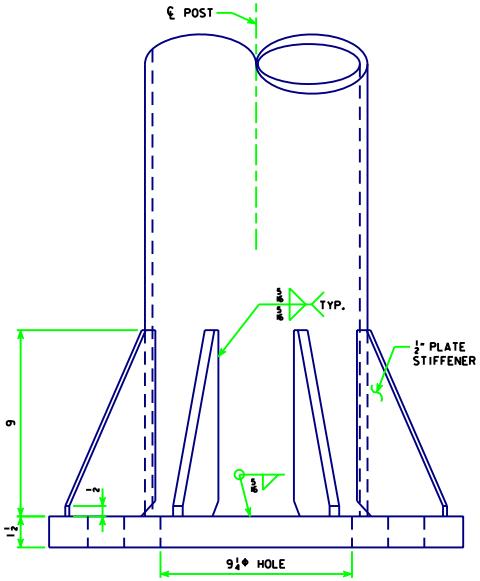

BASE SIDE VIEW

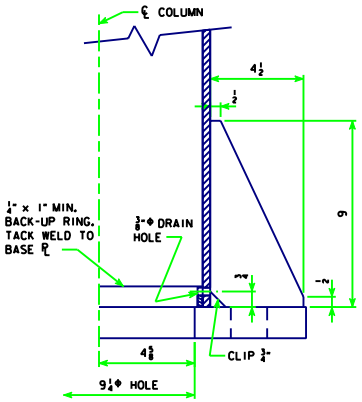

BASE CROSS-SECTION

NOTE: SEE STD. SHEET STOH-08-06 FOR DETAILS OF DETAIL "B" & "C".

LATEST REVISION DATE

APPROVED BY BRIDGE ENGINEER

Iowa Department of Transportation
Highway Division

STANDARD DESIGN

ALUMINUM OVERHEAD SIGN TRUSS WITH GALVANIZED STEEL SUPPORTS

FEBRUARY, 2006

BASE PLATE DETAILS

75' TO 100' SPANS

STOH-06-06