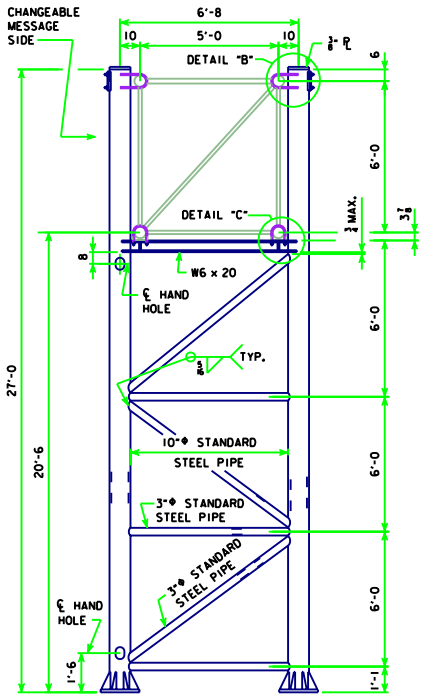

END VIEW OF TRUSS SUPPORT

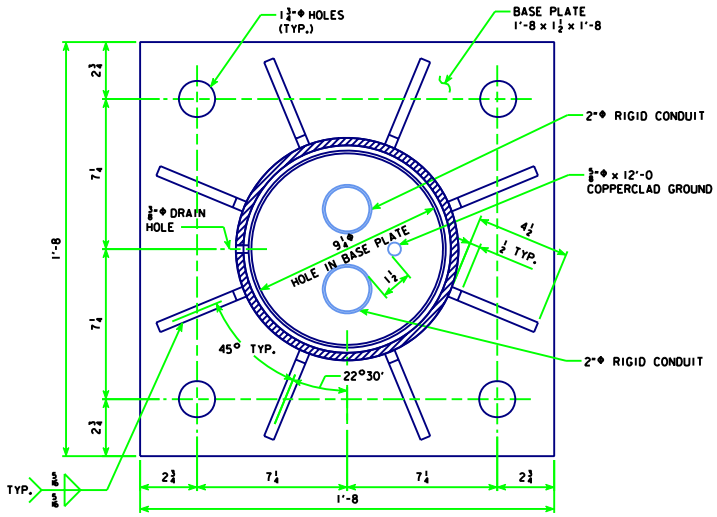

BASE PLATE PLAN

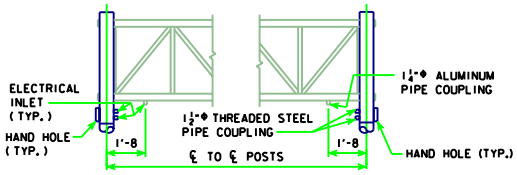

PART ELEVATION

NOTE:
PROVIDE ELECTRICAL INLETS AT CHANGEABLE MESSAGE SIGN. INLETS SHALL BE NO CLOSER THAN 1'-2 TO A TRUSS PANEL POINT.

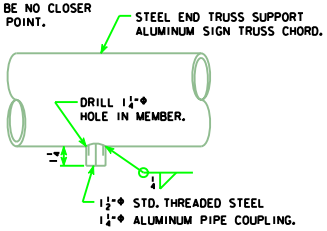

ELECTRICAL INLET

NOTE:
INLET COUPLING IS TO BE STEEL OR ALUMINUM FOR FASTENING TO STEEL OR ALUMINUM MEMBERS RESPECTIVELY AND SHALL BE FITTED WITH STANDARD PLUGS UNTIL CONDUIT IS INSTALLED.

NOTE:
HAND HOLES AND ELECTRICAL INLET HOLES SHALL BE IN BOTH END TRUSS SUPPORTS AND ELECTRICAL INLET HOLES IN BOTH END OVERHEAD TRUSS SECTIONS AND ON DYNAMIC MESSAGE SIDE ONLY.

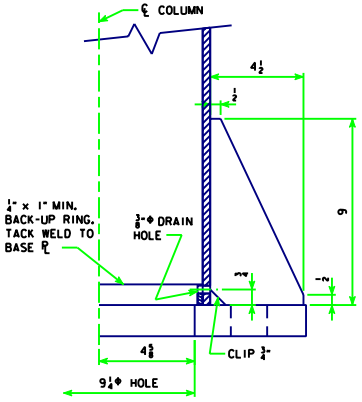

BASE CROSS-SECTION

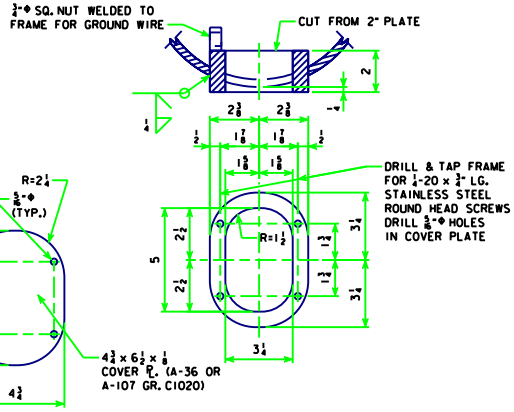

DETAIL "D"

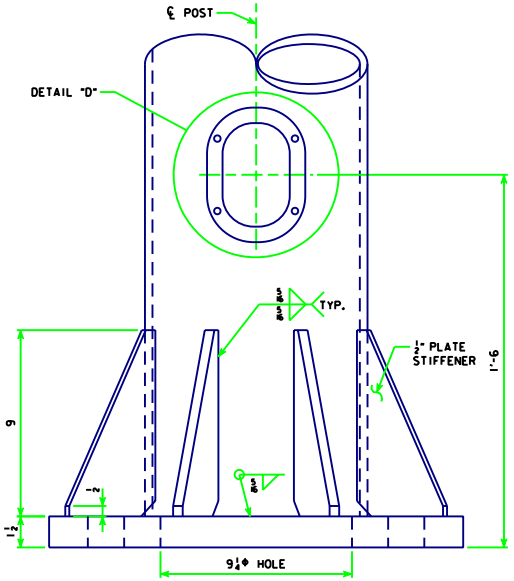

BASE SIDE VIEW

NOTE: SEE STD. SHEET STOH-09-09 FOR DETAILS OF DETAIL "B" & "C".

LATEST REVISION DATE

APPROVED BY BRIDGE ENGINEER

Iowa Department of Transportation
Highway Division

STANDARD DESIGN

ALUMINUM OVERHEAD SIGN TRUSS WITH GALVANIZED STEEL SUPPORTS

FEBRUARY, 2006

ELECTRICAL ACCESS & BASE PLATE DETAILS

50' TO 70' SPANS

STOH-04-06 DMS