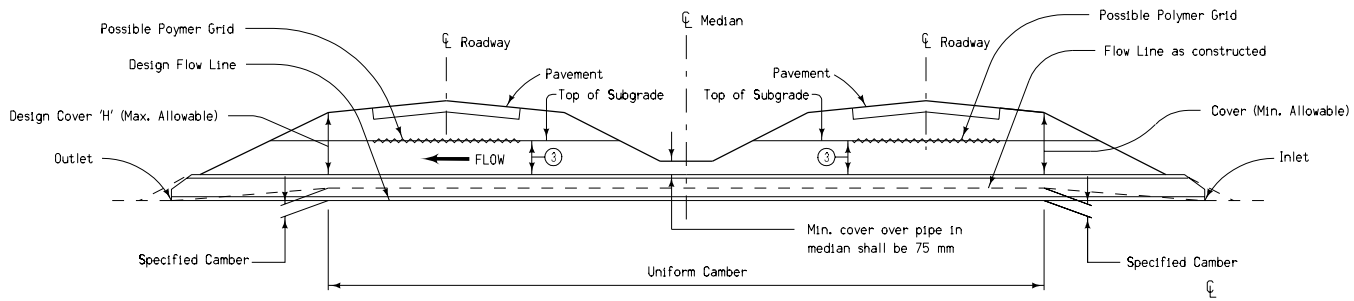

TYPICAL INSTALLATION DUAL ROADWAY

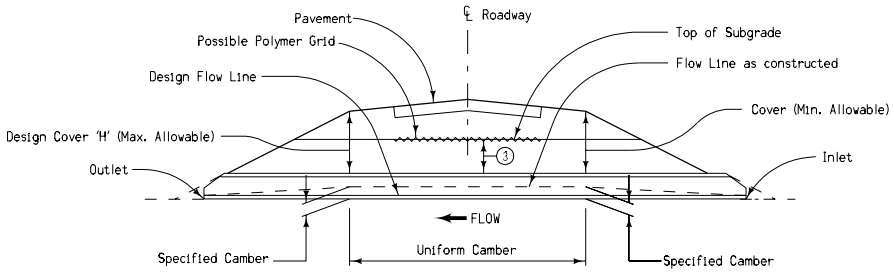

TYPICAL INSTALLATION SINGLE ROADWAY

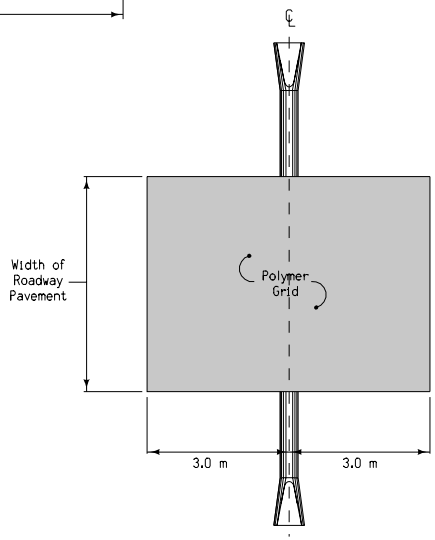

POLYMER GRID
PLACEMENT DETAILS

GENERAL NOTES:

COVER:

Minimum and maximum allowable cover for pipe culverts shall be as shown on the appropriate Standard Road Plans for the particular kind of culvert, as follows:

RF-31 Depth of Cover Tables for Concrete Pipe
RF-32 Depth of Cover Tables for Corrugated PIpe
RF-33 Depth of Cover Tables for Corrugated Pipe

CAMBER:

Camber is the dimension above a straight line between inlet and outlet elevation. Some settlement of the structure is usually anticipated, resulting in the design flow line between inlet and outlet. Camber is developed uniformly from inlet and outlet to a point beneath the outside shoulder lines of the roadway and is uniform between those points, as indicated hereon. The camber indicated in the "Allowable Camber Tables" should be used unless specific camber values are indicated elsewhere in the plans.

1. Camber for concrete pipe is accomplished by placing pipe sections tight at the bottom of the joint with opening at top of joint variable. Camber for corrugated metal pipe shall be accomplished as directed by the Engineer.

JOINT WRAPPING:

All joints on concrete pipe roadway culverts shall be wrapped.

2. Engineering fabric for embankment erosion control.

POLYMER GRID:

Place directly on top of the subgrade as shown. Polymer Grid to be furnished and installed by the contractor placing the subbase. Price bid for "Subgrade Stabilization Material, Polymer Grid", shall be considered full compensation for furnishing and installing Polymer Grid.

3. Polymer Grid is not required when using Class B compaction or if the distance from top of pipe to top of subgrade is less than 0.9 meters.

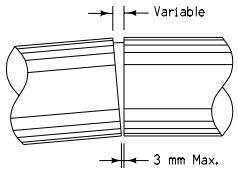

TYPICAL JOINT IN CAMBERED PIPE 1

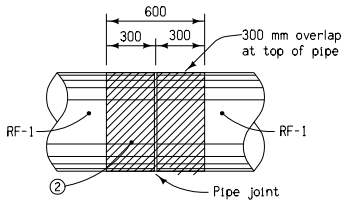

PIPE JOINT WRAPPING

Design Cover 'H' (m)	Normal Camber (mm)
1.5	25
3.0	50
4.5	75
6.0	100
7.5	125
9.0	150
10.5	175

Pipe Size 'D'	Max. Camber (mm)
600	330
750	360
900	390
1050	420
1200	450
1500	480
2100	510

ALLOWABLE CAMBER TABLES

All dimensions given in millimeters unless noted.

M

METRIC VERSION

Iowa Department of Transportation

STANDARD ROAD PLAN

REVISION 8 10-17-06

RF-30B

SHEET 1 of 1

REVISIONS: Change dimensions of polymer grid and modify requirements for polymer

Deanna Maifield
APPROVED BY DESIGN METHODS ENGINEER

PIPE CULVERT
(COVER AND CAMBER)