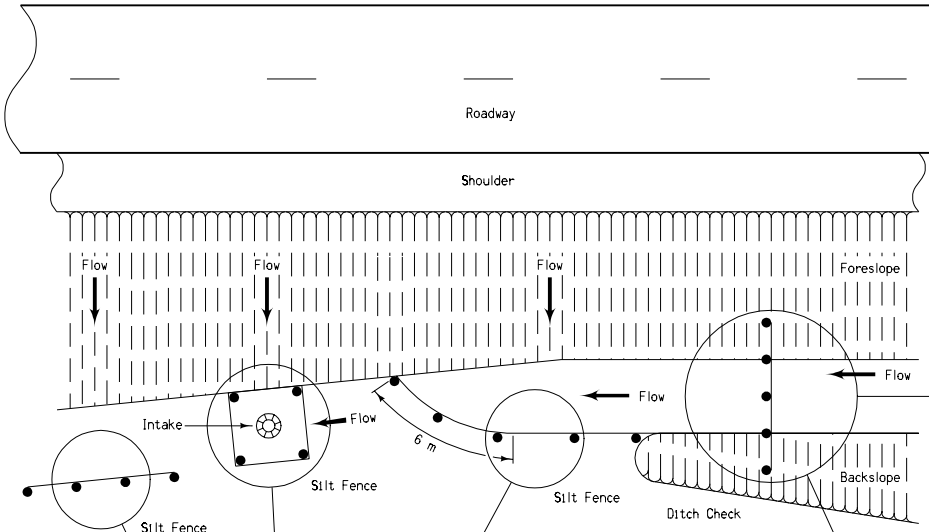

SITUATION PLAN

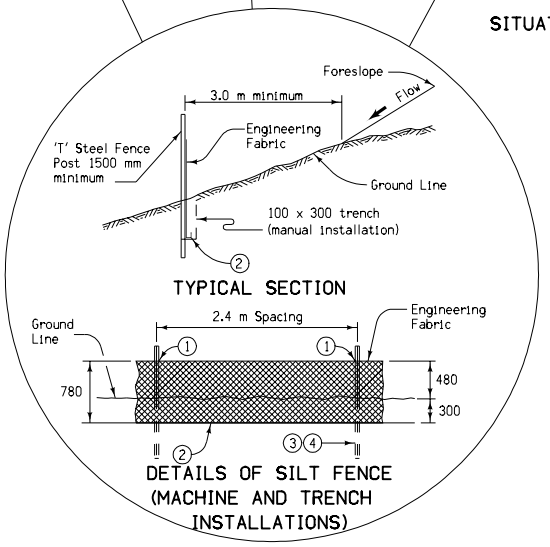

DETAILS OF SILT FENCE (MACHINE AND TRENCH INSTALLATIONS)

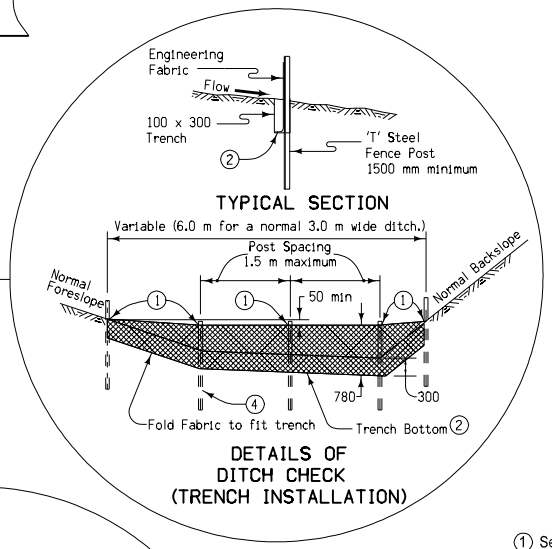

DETAILS OF DITCH CHECK (TRENCH INSTALLATION)

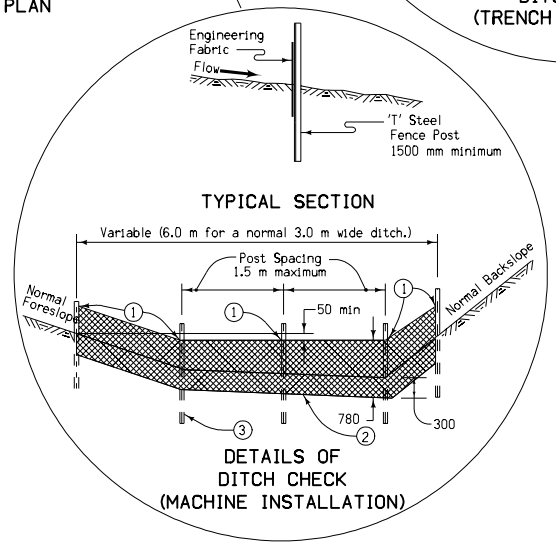

DETAILS OF DITCH CHECK (MACHINE INSTALLATION)

GENERAL NOTES:

For machine installation, all compaction shall be accomplished by driving over each side of silt fence two to four times with device exerting 410 kPa. or greater.

For trench installation, all compaction shall be accomplished with a mechanical or pneumatic tamper.

Contract Items:

Silt Fence
Silt Fence for Ditch Checks

Tabulations: 100-17, 100-18

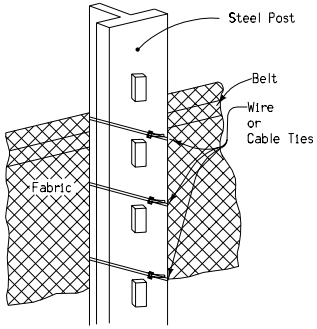

BACK VIEW ATTACHMENT TO POST

1. Secure top of Engineering Fabric to Steel Posts using cable ties (23 kg.) or wire. See details of attachments to post.
2. Engineering Fabric to be folded along the bottom of trench installation only.
3. For machine installation, posts shall be embedded 700 millimeters below the ground line. The post nearest the pavement shall be embedded 1000 millimeters below the ground line.
4. For trench installation, posts shall be embedded 700 millimeters below the trench bottom. The post nearest the pavement shall be embedded 1000 millimeters below the trench bottom.

All dimensions given in millimeters unless noted.

M

Iowa Department of Transportation
Highway Division

METRIC VERSION

STANDARD ROAD PLAN | **RC-17**

REVISION: NEW

REVISION NO.	REVISION DATE
NEW	04-18-06

Deanna Maifield
APPROVED BY DESIGN METHODS ENGINEER

SILT FENCE