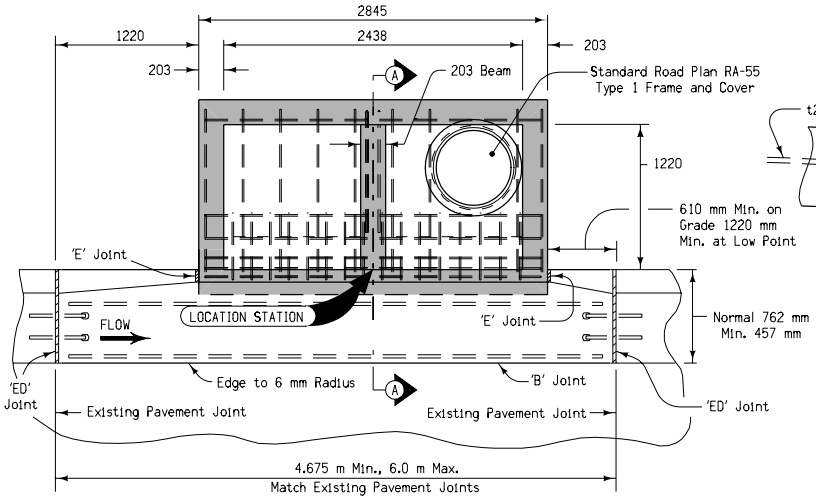

PLAN VIEW

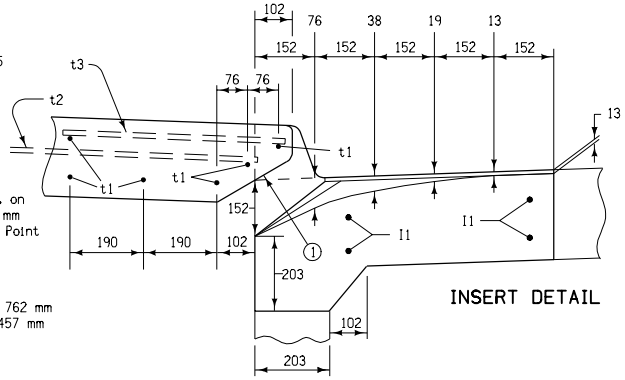

INSERT DETAIL

Contract Item:

Intake, RA-43

① 2:1 slope (horizontal:vertical)

② Dimensions shown are for the construction of a 150 millimeter standard curb as a part of the pavement. Modifications may be made to conform to other curb shapes.

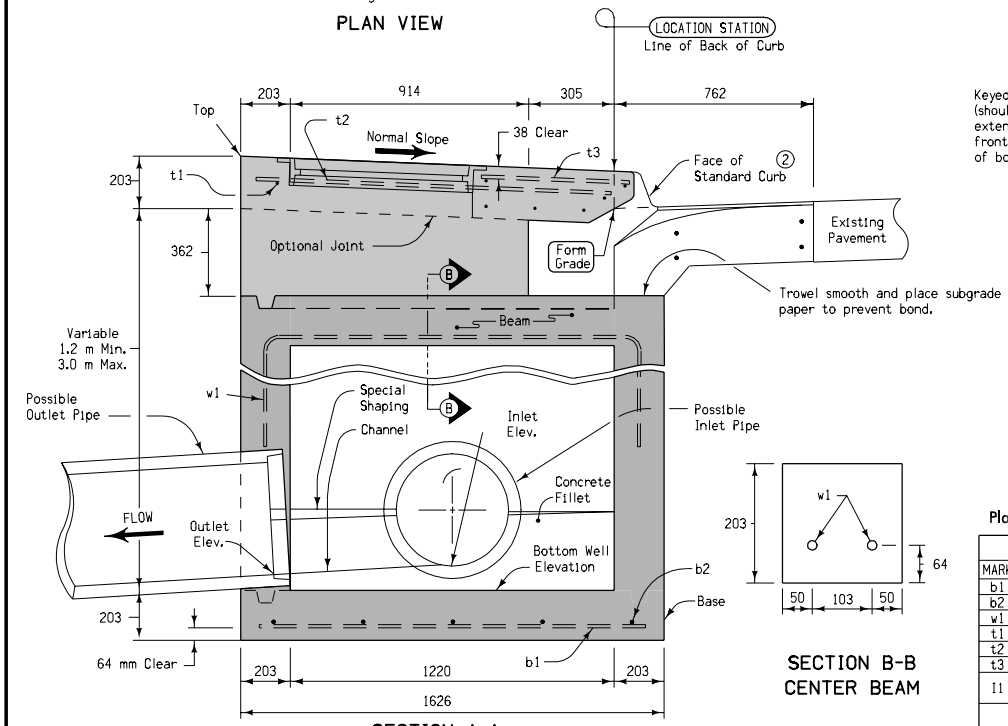

SECTION A-A

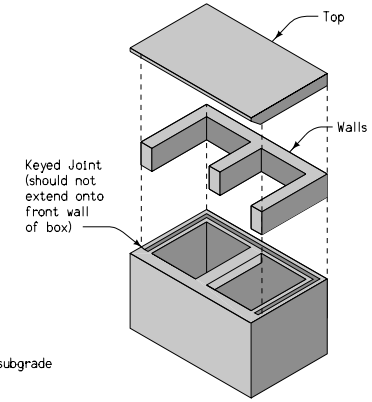

ISOMETRIC VIEW
INTAKE WELL, WALLS AND TOP

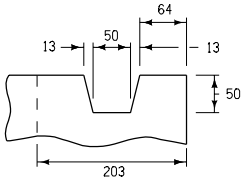

KEYED CONSTRUCTION
JOINT DETAIL

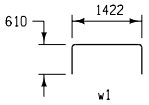

BENT BAR DETAIL

For joint details,
see Standard Road Plans
RH-50, RH-51, and RH-52.

SECTION B-B
CENTER BEAM

All dimensions given in millimeters unless noted.

Placing sequence: 1. Base; 2. Walls; 3. Insert; 4. Top

REINFORCING BAR LIST

MARK	SIZE	LOCATION	SHAPE	NO.	LENGTH	MASS (Kg)	SPACING
b1	10	Base	——	9	1524 mm	10.77	305 mm
b2	10	Base	——	5	2743 mm	10.77	356 mm
w1	15	Beam	⊓	2	2642 mm	8.30	102 mm
t1	10	Top	——	7	2743 mm	15.07	See Detail
t2	10	Top	——	9	1372 mm	9.69	305 mm
t3	10	Top	——	16	559 mm	7.02	152 mm
I1	10	Insert	——	4	4369 mm	13.72	4.5 m Insert
					5893 mm	18.50	6.0 m Insert
					Total Mass	75.34	4.5 m Insert
						80.12	6.0 m Insert

M

METRIC VERSION

Iowa Department of Transportation
Highway Division

STANDARD ROAD PLAN | **RA-43**

REVISION: Change 'EE' Joint to 'ED' Joint and remove notes covered in the Specifications Book; change title.

REVISION NO.	REVISION DATE
4	04-19-05

William J. Stein
APPROVED BY DESIGN METHODS ENGINEER

CURB INTAKE
(DOUBLE UNIT)