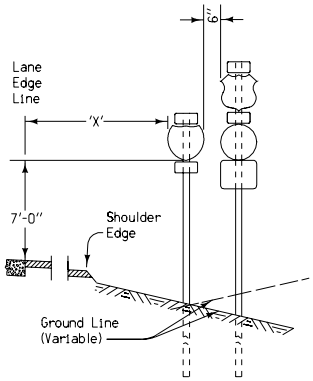

FRONT VIEW
ROUTE DIRECTION MARKER
Type-1 Installation

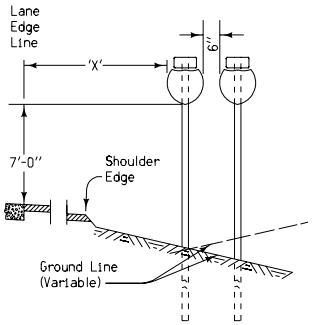

FRONT VIEW
DUAL CONFIRMATION
Type-1 Installation

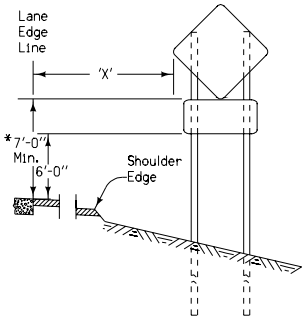

FRONT VIEW
WARNING SIGN
WITH ADVISORY PLATE
* Without Advisory Plate
Type 1 Installation

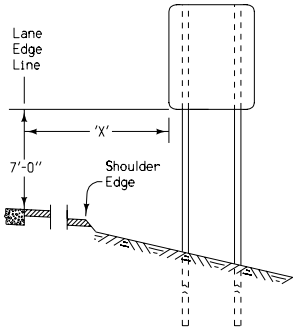

FRONT VIEW
REGULATORY SIGN
Type 1 Installation

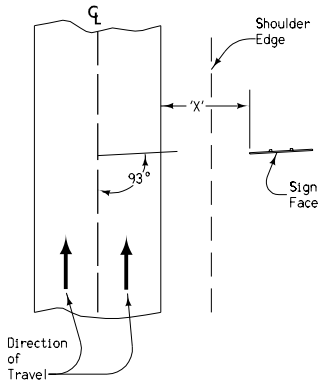

SIGN ORIENTATION PLAN

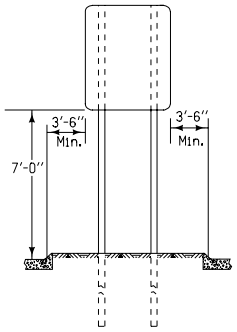

FRONT VIEW
SIGN LOCATION
Type - 3 Installation

Type 3 Installation is intended to show the requirements for a Type 'A' sign when installed in an island or median (where traffic passes on both sides of the sign) as well as for locations where the Type 'A' sign is installed adjacent to a curbed roadway (sign may be located on either side of a roadway as specified in project plans).

See "Summary of Materials for Type 'A' Signs" and the Sign Type and Location Plan Sheets for data regarding specific sign assemblies.

Final location of Signs shall be at the discretion of the Engineer.

Iowa Department of Transportation

STANDARD ROAD PLAN

REVISION	
1	10-17-06

RD-28

SHEET 1 of 1

REVISIONS: Added lane edge line; Eliminated several views.

Deanna Maifield
APPROVED BY DESIGN METHODS ENGINEER

LOCATION FOR TYPE 'A' SIGNS