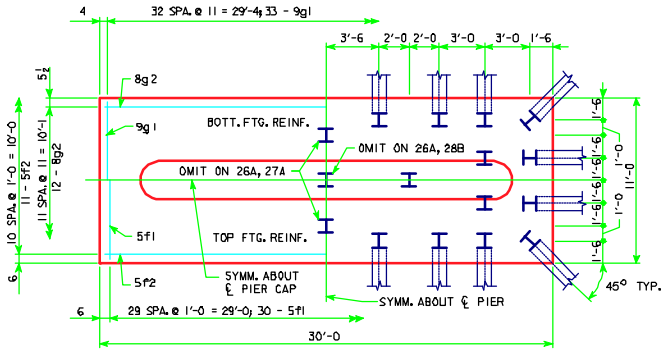

26A 27A 28B

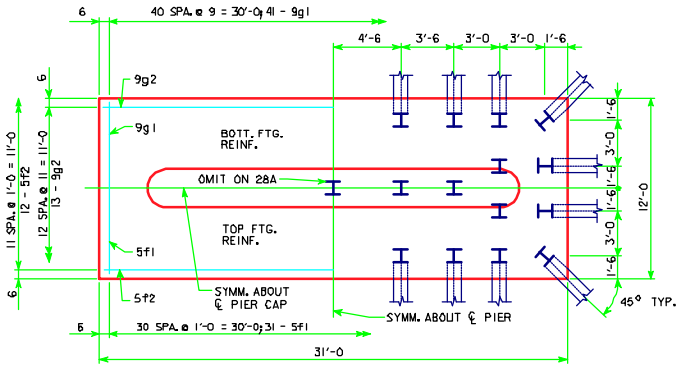

28A 29A

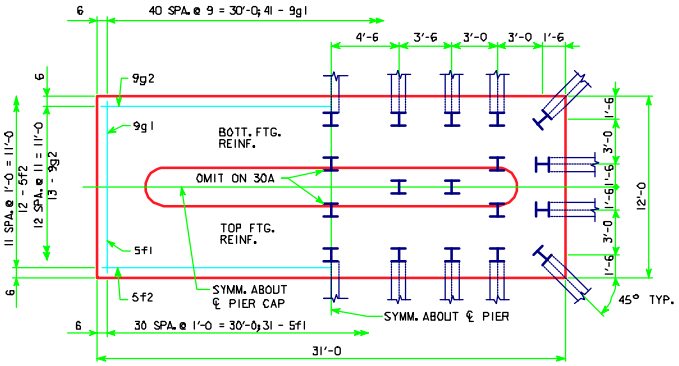

30A 32A

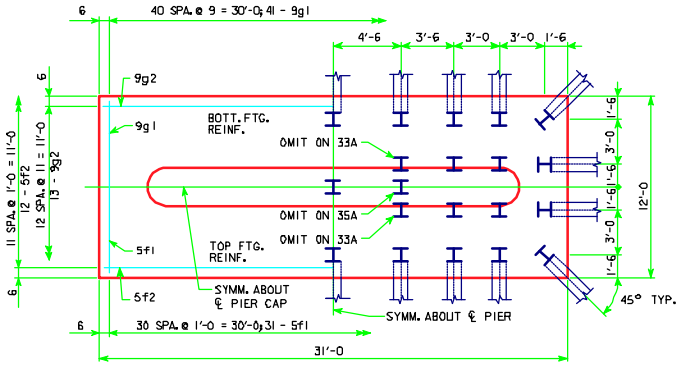

33A 35A

LATEST REVISION DATE

APPROVED BY BRIDGE ENGINEER

Iowa Department of Transportation
Highway Division

STANDARD DESIGN - 40' ROADWAY, 3 SPAN BRIDGES

ROLLED STEEL BEAM BRIDGES

FEBRUARY, 2004

T PIER 30° SKEW
STEEL PILE FOOTINGS

SHEET 3 OF 3

RS40-PR16-04