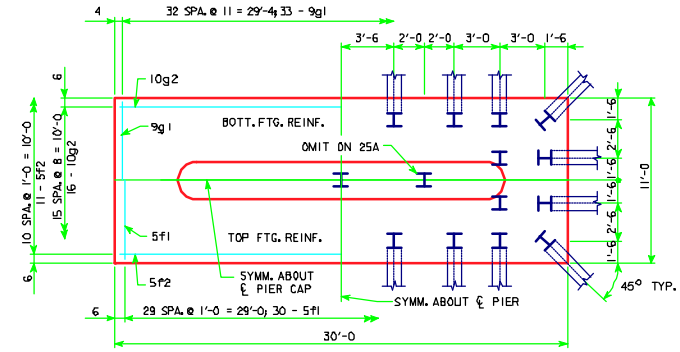

25A 27A

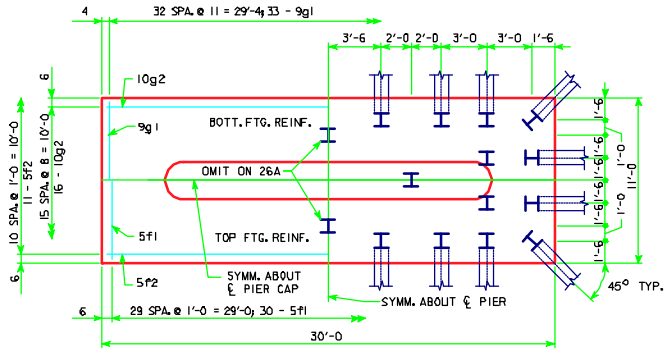

26A 28B

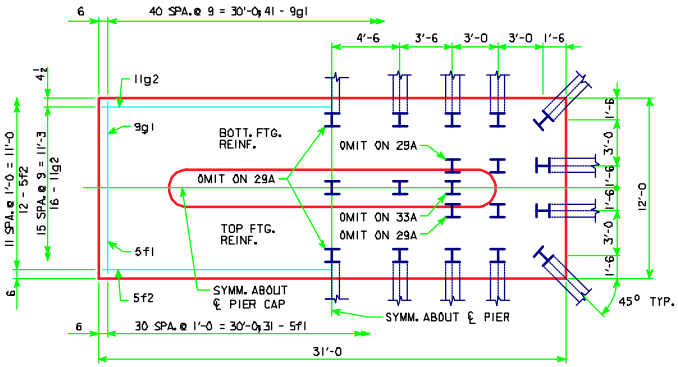

29A 33A

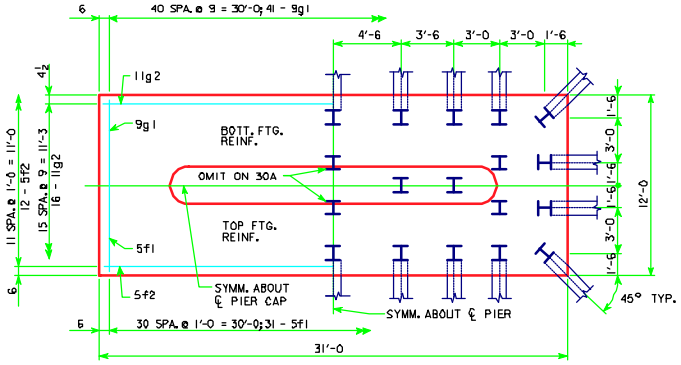

30A 32A

LATEST REVISION DATE

APPROVED BY BRIDGE ENGINEER

Iowa Department of Transportation
Highway Division

STANDARD DESIGN - 40' ROADWAY, 3 SPAN BRIDGES

ROLLED STEEL BEAM BRIDGES

FEBRUARY, 2004

T PIER 20° SKEW
STEEL PILE FOOTINGS
SHEET 3 OF 3

RS40-PRI2-04