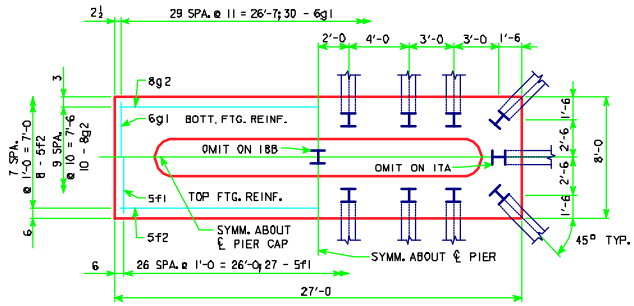

17A 18B 19B

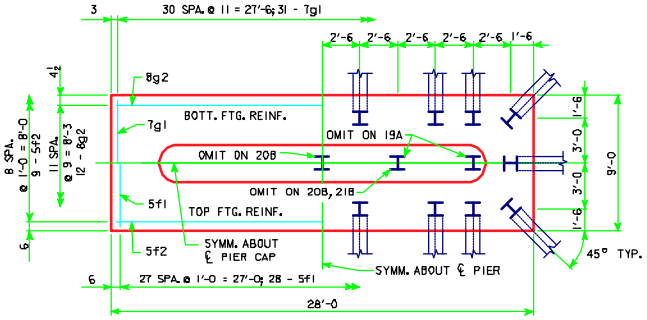

19A 20B 21B

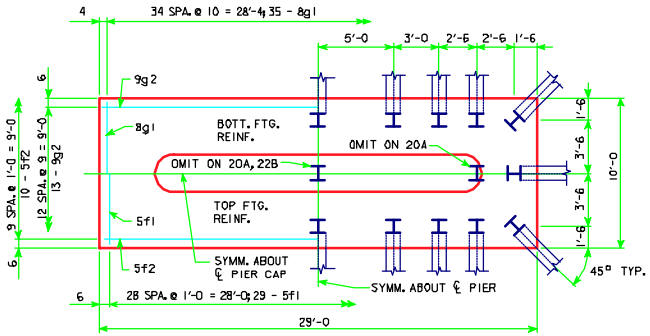

20A 22B 23B

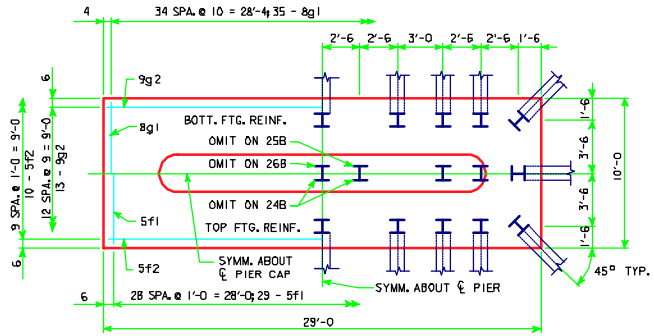

24B 25B 26B

LATEST REVISION DATE

APPROVED BY BRIDGE ENGINEER

Iowa Department of Transportation
Highway Division

STANDARD DESIGN - 40' ROADWAY, 3 SPAN BRIDGES

ROLLED STEEL BEAM BRIDGES

FEBRUARY, 2004

T PIER 20° SKEW
STEEL PILE FOOTINGS
SHEET 2 OF 3

RS40-PR11-04