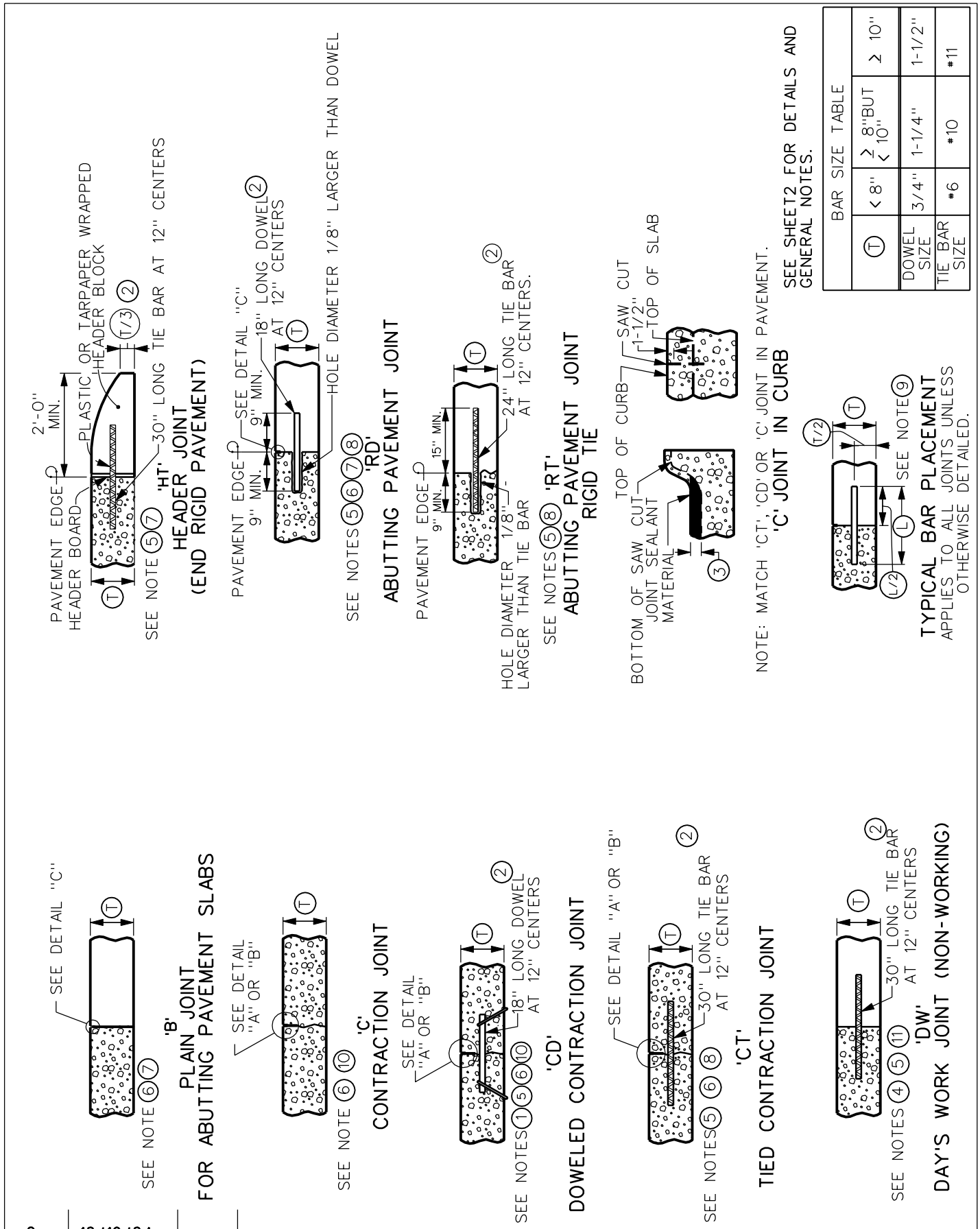

REV.	DATE	BY
2	10/19/04	

DATE: 01-01-98

JOINTS (TRANSVERSE CONTRACTION)

FIGURE: 7010.4A

SHEET 1 OF 2

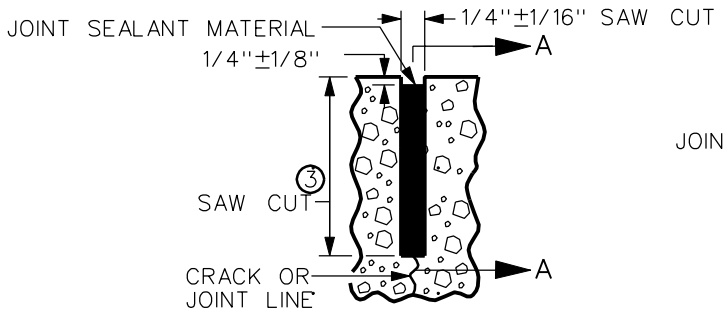

DETAIL "A"

(SAWCUT FORMED BY CONVENTIONAL CONCRETE SAWING EQUIPMENT)

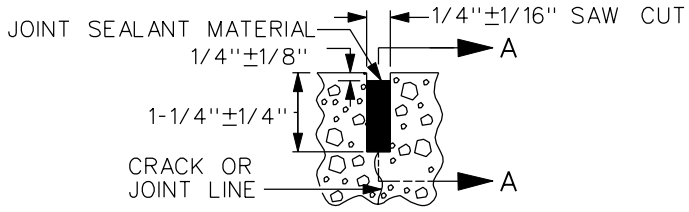

DETAIL "B"

(SAWCUT FORMED BY APPROVED EARLY CONCRETE SAWING EQUIPMENT)

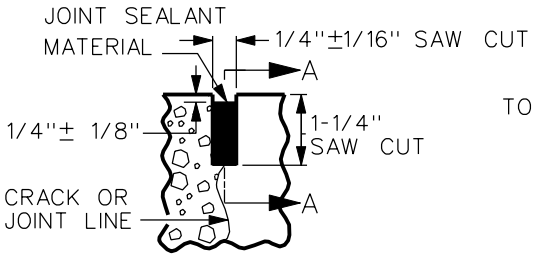

DETAIL "C"

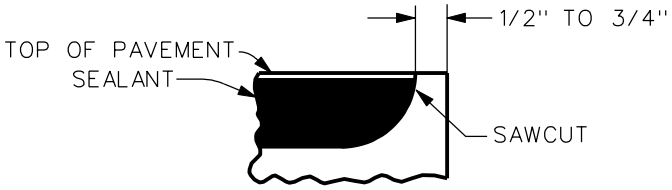

SECTION A-A
DETAIL AT EDGE OF PAVEMENT

NOTES:

1. FREE MOVING ENDS OF DOWEL SUPPORT ASSEMBLY SHALL BE PLACED ALTERNATELY ACROSS JOINTS.
2. REFER TO BAR SIZE TABLE
3. DEPTH OF SAWCUT SHALL BE T/3.
4. 'DW' JOINT SHALL BE LOCATED AT A MIDPANEL LOCATION BETWEEN FUTURE 'C' OR 'CD' JOINTS. IT SHALL BE NO CLOSER THAN 5'-0" TO A 'C' OR 'CD' JOINT.
5. BARS IN TRANSVERSE JOINTS SHALL BE PLACED SO THAT NO BAR WILL BE CLOSER THAN 6" TO ANY LONGITUDINAL JOINT (CENTERLINE OR LANELINE). THE DISTANCE TO THE FIRST BAR FROM EDGE OF PAVEMENT WILL VARY FROM 6" TO 12" DEPENDING UPON PAVEMENT WIDTH.
6. JOINTS SHALL BE SEALED ACCORDING TO THE STANDARD AND SUPPLEMENTAL SPECIFICATIONS ON "SEALING JOINTS".
7. EDGE WITH 1/4" TOOL FOR LENGTH OF JOINT INDICATED IF FORMED; EDGING NOT REQUIRED WHEN CUT WITH DIAMOND BLADE SAW. REMOVE HEADER BLOCK AND BOARD WHEN SECOND SLAB IS POURED.
8. PLACEMENT OF DOWELS OR TIE BARS SHALL BE IN ACCORDANCE WITH SECTION 7010, 3.04.
9. WHEN TYING INTO OLD PAVEMENT, Ⓣ REPRESENTS THE DEPTH OF SOUND PORTLAND CEMENT CONCRETE.
10. UNLESS OTHERWISE SPECIFIED, TRANSVERSE CONTRACTION JOINTS IN MAINLINE PAVEMENT SHALL BE 'CD' WHEN Ⓣ IS GREATER OR EQUAL TO 8". 'C' WHEN Ⓣ IS LESS THAN 8".
11. 'RT' JOINT MAY BE USED IN LIEU OF 'DW' JOINT AT THE END OF THE DAY'S WORK. ANY PAVEMENT DAMAGED DUE TO THE DRILLING SHALL BE REMOVED AT THE CONTRACTOR'S EXPENSE.

REV.	DATE	BY	JOINTS (TRANSVERSE CONTRACTION)	FIGURE: 7010.4A
3	10/19/04			
DATE: 01-01-98				SHEET 2 OF 2