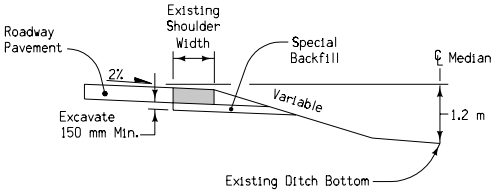

Section A-A

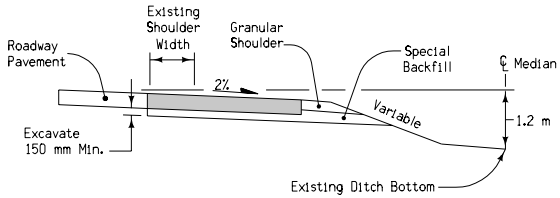

Section B-B

Pavement options: 230 mm PCC or 300 mm HMA

Contract Items:

- Detour Pavement
- Special Backfill
- Granular Shoulder
- Embankment In Place
- Excavation, Class 10, Roadway and Borrow
- Excavation, Class 13, Roadway and Borrow
- Removal of Pavement

Tabulation: 112-8

1. Match crossover pavement joints with existing roadway joints. 'CD' joints are required. See Standard Road Plan RH-50.
2. KT-2 Joint, bend bars out for new pavement only.
3. Median crossover is symmetrical at centerline.
4. Median pipe for crossover. See Detail Sheet 500-19.

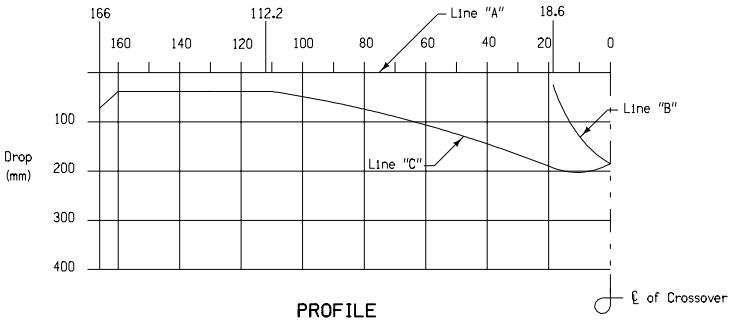

PROFILE

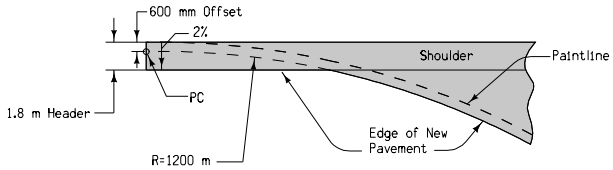

Detail 'A'

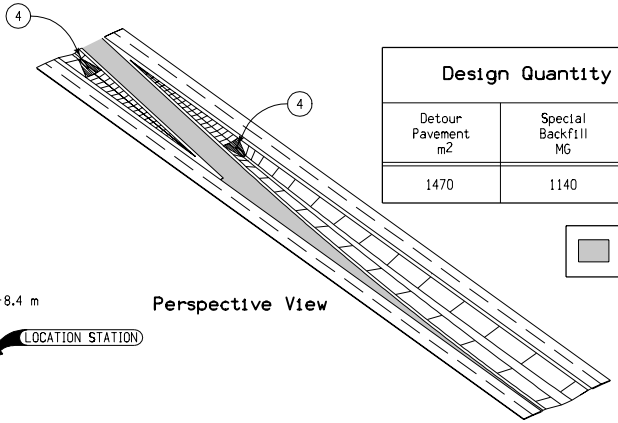

Perspective View

Design Quantity Table		
Detour Pavement m2	Special Backfill MG	Granular Shoulder MG
1470	1140	100

Detour Pavement

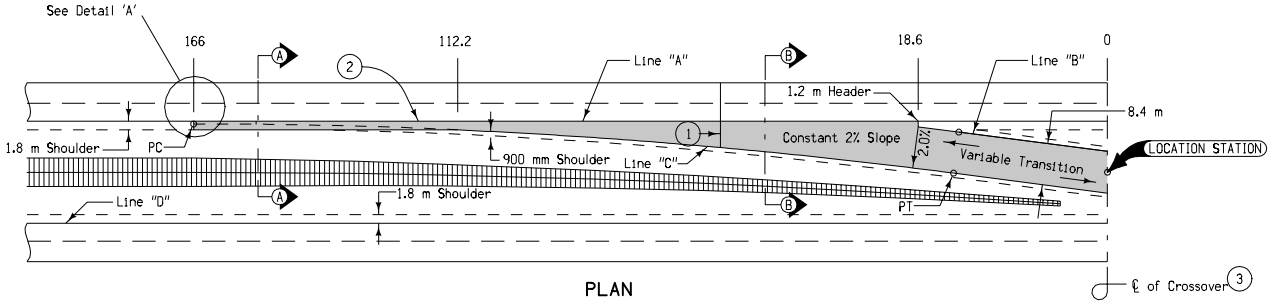

PLAN

All dimensions given in millimeters unless noted.

Table Of Offsets And Drops																				
Distance (m)	166	160	150	140	130	120	112.2	110	100	90	80	70	60	50	40	30	20	18.6	10	0
Offset A to C (m)	1.8	1.8	1.8	1.8	1.8	1.8	1.8	1.90	2.41	3.00	3.68	4.44	5.28	6.21	7.22	8.32	9.49	9.66	10.67	11.8
Drop A to C (mm)	72	36	36	36	36	36	36	38	48.2	60	73.6	88.8	105.6	124.2	144.4	166.4	189.8	193.2	202.62	184.8
Drop A to B (mm)																		24	129.4	184.8

M

METRIC VERSION

Iowa Department of Transportation
Highway Division

STANDARD ROAD PLAN **RV-12C**

REVISION: Remove "Crossover Pavement" label; note pavement thickness options.

REVISION NO.	REVISION DATE
1	10-18-05

William J. Stein
APPROVED BY DESIGN METHODS ENGINEER

MEDIAN CROSSOVER
(15.24 m MEDIAN)
8.4 m WIDE 2 LANE