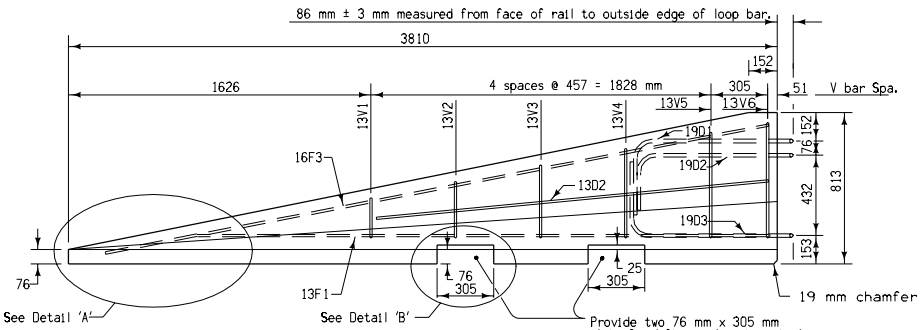

SIDE ELEVATION
(For connection to left end of Barrier)

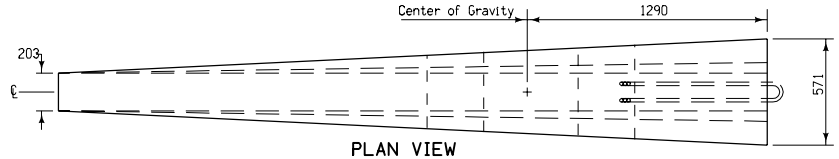

PLAN VIEW

Bar	a	b
V1	254	25
V2	330	32
V3	432	41
V4	508	48
V5	622	60
V6	686	70

Estimated quantity for one taper section is 0.5 cubic meters of concrete.

The taper section is not needed if a temporary attenuator is used.

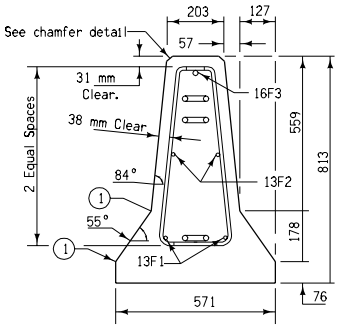

END SECTION

① 25 mm radius allowed.

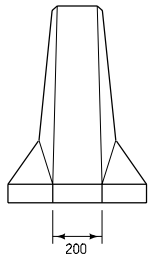

FRONT ELEVATION

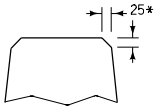

CHAMFER DETAIL

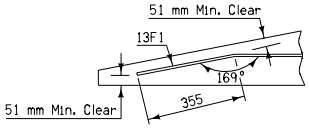

DETAIL 'A'
BENT BAR DETAIL

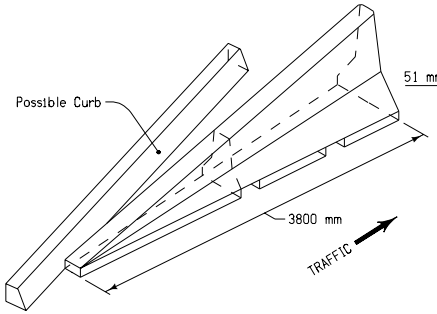

PERSPECTIVE VIEW

Per 3810 mm Barrier Taper Section

REINFORCING A615M Gr. 420					
Bar	Bar Size	Shape	No. of Bars	Length mm	Weight kg
13V1	13	[	2	584	1.2
13V2	13	[	2	660	1.3
13V3	13	[	2	762	1.5
13V4	13	[	2	838	1.7
13V5	13	[	2	965	1.9
13V6	13	[	2	1016	2.0
13F1	13	—	2	3658	7.3
13F2	13	—	2	2286	4.5
13F3	16	—	1	3581	5.6
LOOP ASSEMBLY					
19D1	19	⌐	1	2565	5.7
19D2	19	⌐	1	2311	5.2
19D3	19	⌐	1	2591	5.8

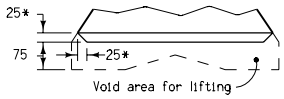

DETAIL 'B'
LIFTING SLOT DETAIL
* 25 mm Chamfer to prevent spalling

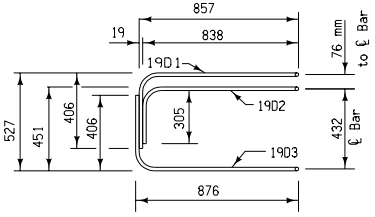

Elevation

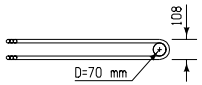

Plan

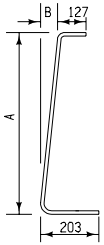

13V bars
2 at each size required for stirrup assembly

LOOP BAR ASSEMBLY
(Left Barrier Connection shown, invert for other end)

All dimensions given in millimeters unless noted.

NOTE:
Standard Road Plan RE-72 to be used in conjunction with Standard Road Plan RE-71.

M

METRIC VERSION

Iowa Department of Transportation
Highway Division

STANDARD ROAD PLAN | **RE-72**

REVISION: Taper sections is not needed if a temporary attenuator is used.

REVISION NO. 7

REVISION DATE 10-18-05

William J. Stein
APPROVED BY DESIGN METHODS ENGINEER

F-SHAPE TEMPORARY CONCRETE BARRIER RAIL TAPER SECTION (PRECAST)