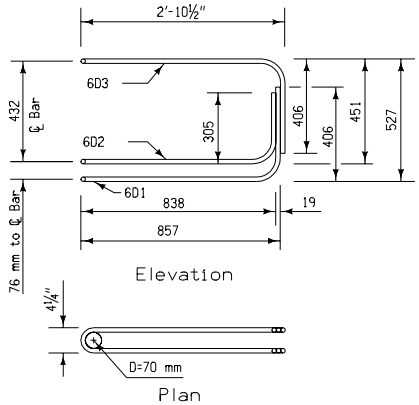

LOOP BAR ASSEMBLY

(Marked end shown, invert for other end)

(Material as stated in General Notes)

(Dimensions are out to out of bars unless otherwise noted.)

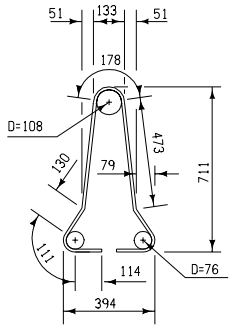

4A1

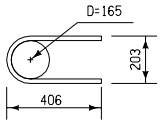

6A2

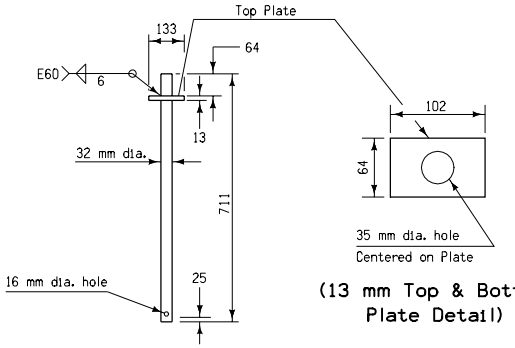

DETAIL A
CONNECTION PIN
(A36M Steel) 4.9 kg. each

(13 mm Top & Bottom Plate Detail)

BOLT & NUT
13 mm dia. bolt & nut
(ASTM A490M, Grade 8)

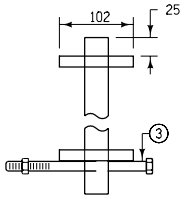

ENLARGED PIN DETAIL

Type B tie down straps are to be used as indicated in Tabulation 108-33.

When the anchor bolts are removed, the holes should be filled with a non-shrink grout, meeting the requirements of ASTM C 1107 for Grade B or C.

Tie Downs are considered incidental to the pay item "Temporary Barrier Rail, Concrete".

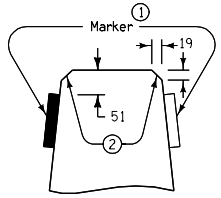

MARKER PLACEMENT DETAIL

Per 3810 mm Barrier Section

REINFORCING A615M Gr. 420					
Bar	Bar Size	Shape	No. of Bars	Length mm	Weight kg
4A1	13		12	1834	21.9
6A2	19		6	898	12.0
5B1	16		3	3708	17.3
4C1	13		2	3708	7.4
LOOP ASSEMBLY					
6D1	19		2	2565	25.3
6D2	19		2	2311	22.8
6D3	19		2	2591	11.6

1. Color same as adjacent edgeline.
2. 25 mm radius allowed.
3. Retainer bolt & nut are not required with 3-loop barrier. Bolt & nut are required with 2-loop barriers (previous design), and with the strap tie down.

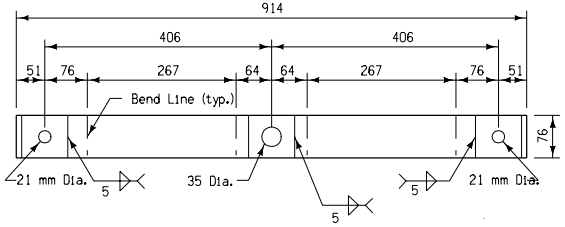

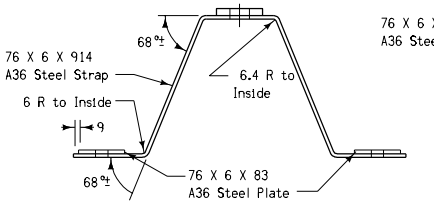

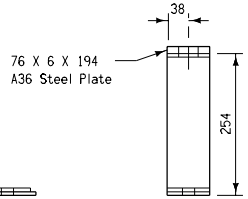

TYPE B TIE-DOWN STRAP DETAILS

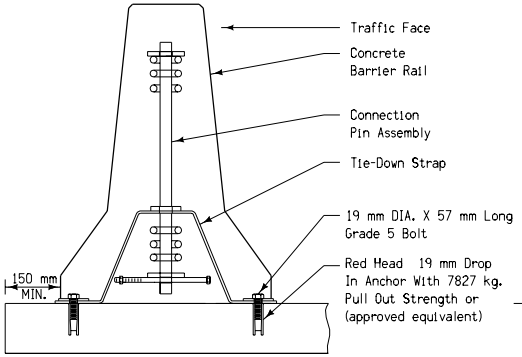

SECTION C-C

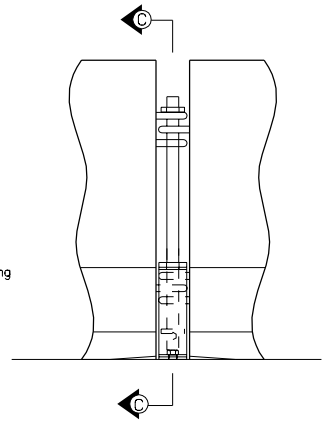

M

METRIC VERSION

Iowa Department of Transportation
Highway Division

STANDARD ROAD PLAN **RE-71(2)**

REVISION: Show Type 'B' (strap) tie down 150 mm from drop off.

REVISION NO.
5
REVISION DATE
04-19-05

William J. Stein
APPROVED BY DESIGN METHODS ENGINEER

F-SHAPE (PRECAST)
TEMPORARY CONCRETE BARRIER RAIL
(Sheet 2 of 2)