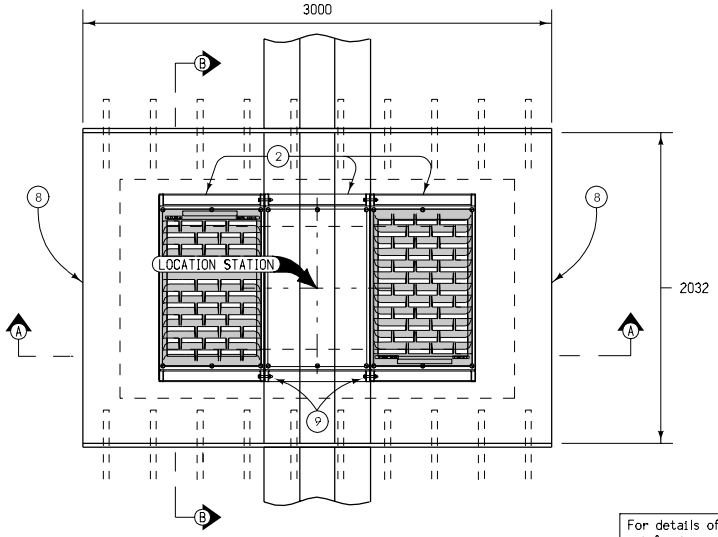

PLAN VIEW
FINAL STAGE

For details of base, wall and top reinforcing see sheets 1 and 2.

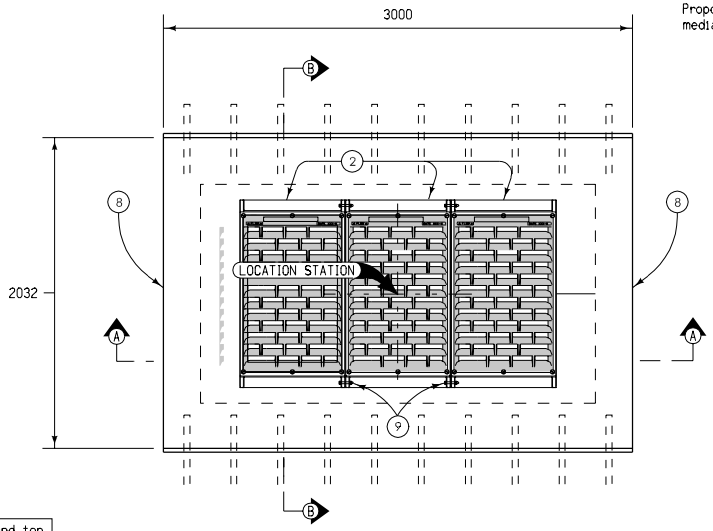

PLAN VIEW
UNDER TRAFFIC

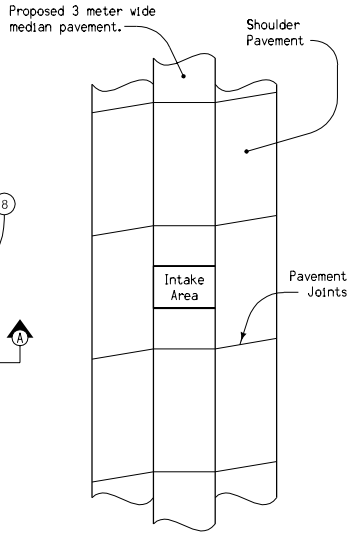

PAVEMENT JOINT LAYOUT DETAIL

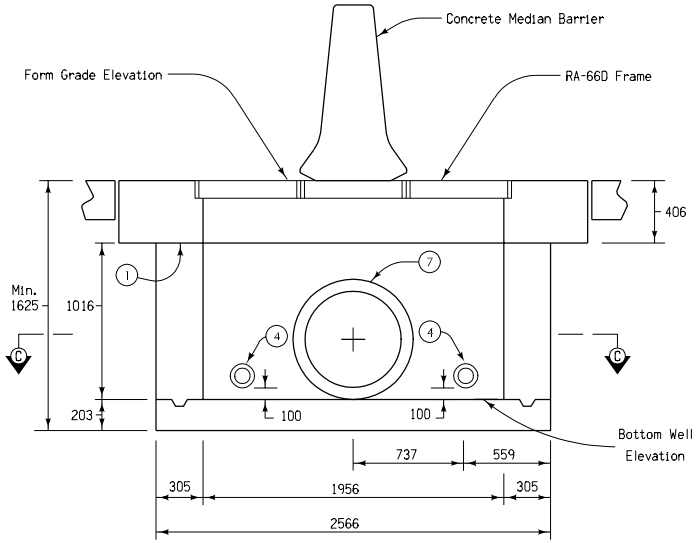

SECTION A-A

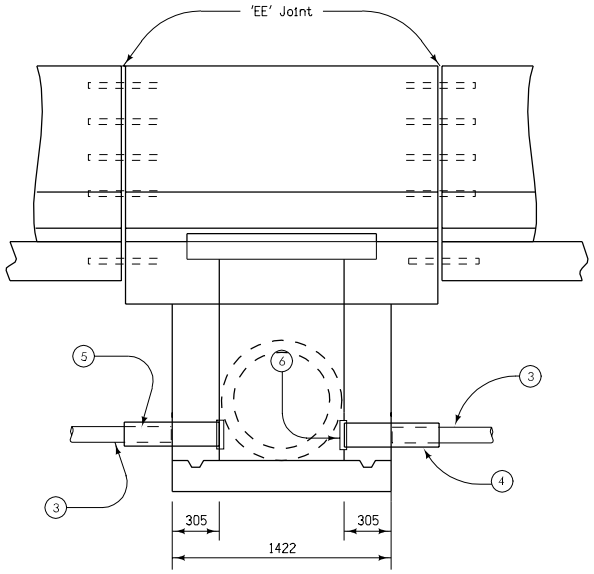

SECTION B-B

Placing sequence: 1. Base; 2. Walls; 3. Top

1. Trowel smooth and place 2 layers of #30 roofing felt to prevent bond.
2. (3) Frames cast into intake top. See Standard Road Plan RA-66D.
3. 100 millimeter Perforated Subdrain (Polyethylene corrugated tubing).
4. 150 millimeter CMP 610 millimeters long.
5. Perforated Subdrain fits into CMP minimum 300 millimeters if grout is used. At contractor's option, use reducing coupler or grout.
6. Removable mesh cap, 9.5 millimeter hardware cloth.
7. Proposed 610 millimeter concrete pipe as per Project Plans.
8. 'K' Joint
9. Bolt intake frames together on both sides with (4) 13 mm X 100 mm bolts.

All dimensions given in millimeters unless noted.

M

METRIC VERSION

Iowa Department of Transportation
Highway Division

STANDARD ROAD PLAN **RA-47(3)**

REVISION: Changed 'K' Joint to 'E' Joint. Show subdrain on both sides.

REVISION NO.	REVISION DATE
2	10-29-02

William J. Stein
APPROVED BY DESIGN METHODS ENGINEER

MEDIAN INTAKE
(Sheet 3 of 3)