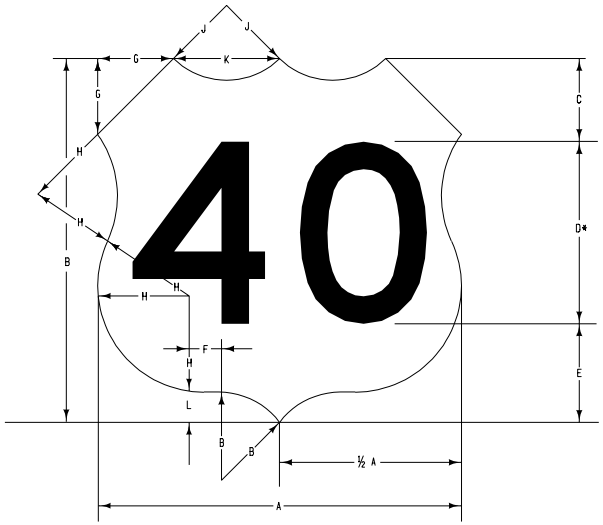

* Optically space numerals about vertical centerline

SIGN	DIMENSIONS (INCHES)										
	A	B	C	D	E	F	G	H	J	K	L
1,2-Digits	24	24	5½	120	5½	1	5	7	5	7	2
1,2-Digits	36	36	8¼	180	9¾	1½	7½	10½	7½	10½	3
3-Digits	30	24	5½	120	6½	4	5	7	9	10	2
3-Digits	45	36	8¼	180	3¾	5½	7½	10½	13½	15	3

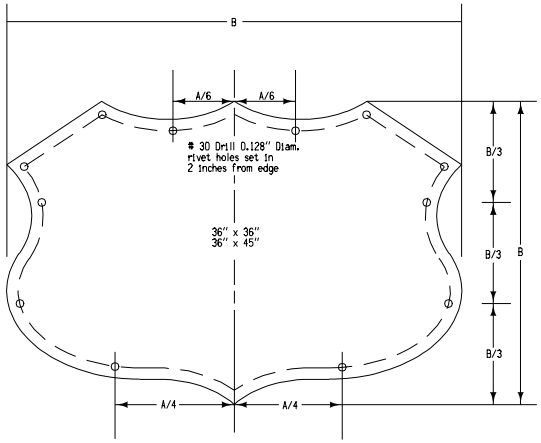

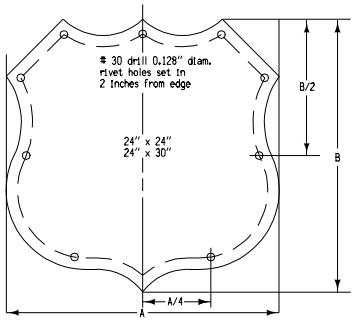

LOCATION OF RIVET HOLES FOR U.S. ROUTE MARKERS

Note: For use on ground mounted or overhead signs.

The U. S. Route Markers and the Iowa Route Markers to be attached to all Type 'B' guide signs shall be 0.064 inch metal (tolerance of 0.004 inch) with a background of smooth silver reflective sheeting. Route marker numerals shall be black ink applied by direct silk screen process.

Dimensions shall be to the nearest ⅛ inch.

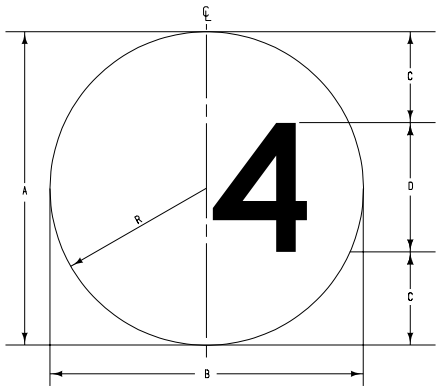

	6" Numerals		10" Numerals 12" Numerals		12" Numerals 15" Numerals		15" Numerals 18" numerals	
A	16		24		30		36	
B	16		24		30		36	
C	5		7		9		10½	
D	1 or 2 digits	3 digits	1 or 2 digits	3 digits	1 or 2 digits	3 digits	1 or 2 digits	3 digits
	6" D	6" C	12" D	10" D	15" D	12" D	18" D	15" C
R	8		12		15		18	

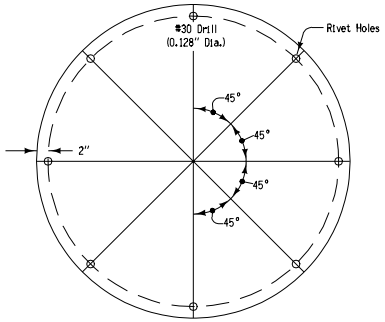

The 16", 24", 30", and 36" State Route Markers shall have 8 rivet holes spaced as shown above.

LOCATION OF RIVET HOLES FOR STATE ROUTE MARKERS

Iowa Department of Transportation
Highway Division

STANDARD ROAD PLAN | **RD-43**

REVISION: NEW

REVISION NO. NEW

REVISION DATE 04-15-03

William J. Stein
APPROVED BY DESIGN METHODS ENGINEER

U.S. AND STATE ROUTE MARKERS FOR TYPE "B" GUIDE SIGNS