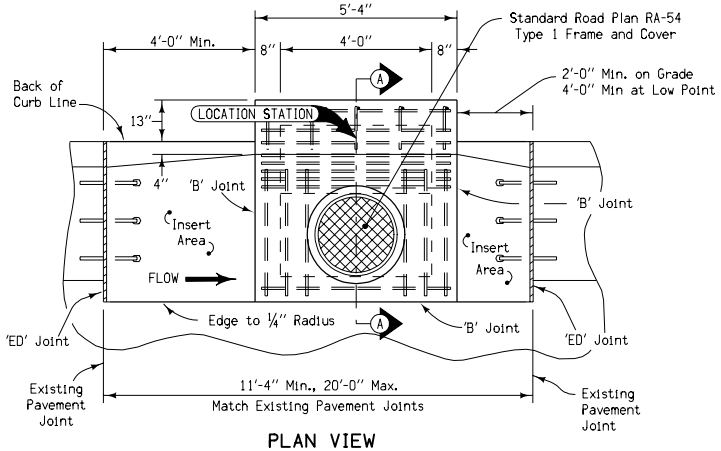

PLAN VIEW

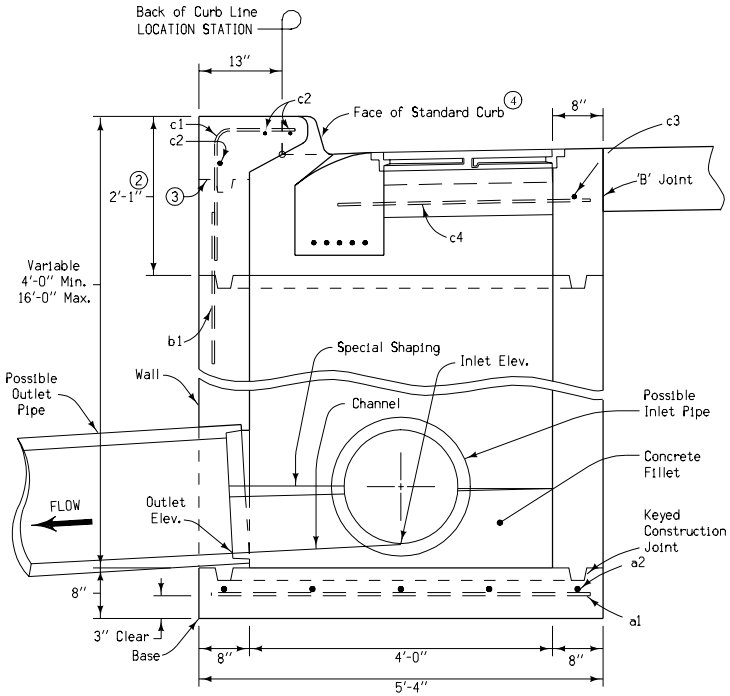

SECTION A-A

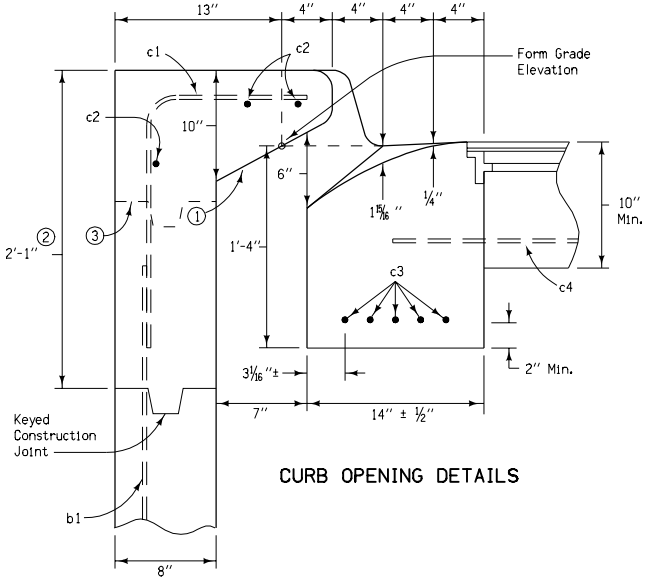

CURB OPENING DETAILS

Contract Item:

Intake, RA-41

1. 2:1 slope (horizontal:vertical)
2. Shall be 39 inches when attaching the RA-42 extension unit.
3. Additional keyed construction joint when attaching the RA-42 extension unit.
4. Dimensions shown are for the construction of a 6 inch standard curb as a part of the pavement. Modifications may be made to conform to other curb shapes.

Placing sequence: 1. Base; 2. Walls; 3. Top; 4. Insert

REINFORCING BAR LIST

BAR	SIZE	LOCATION	SHAPE	NO.	LENGTH	WEIGHT	SPACING
a1	4	Base	———	5	5'-0"	17	14"
a2	4	Base	———	5	5'-0"	17	14"
b1	4	Wall	———	5	3'-0"	10	14"
c1	4	Top	⌐	5	2'-8"	9	14"
c2	4	Top	———	3	5'-0"	10	See Detail
c3	4	Top	———	6	5'-0"	20	See Detail
c4	4	Top	———	6	3'-4"	13	See Detail
					Total	96 lbs.	

For joint details, see Standard Road Plans RH-50, RH-51, and RH-52.

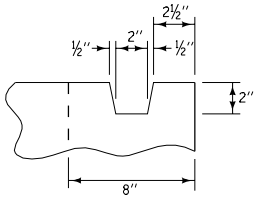

KEYED CONSTRUCTION JOINT DETAIL

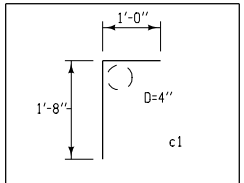

BENT BAR DETAIL

Iowa Department of Transportation
Highway Division

STANDARD ROAD PLAN | **RA-41**

REVISION: Change 'EE' Joint to 'ED' Joint; remove notes covered in the Specifications Book; change title.

REVISION NO. 3

REVISION DATE 04-19-05

APPROVED BY DESIGN METHODS ENGINEER

CURB INTAKE
(UNDER PAVEMENT)