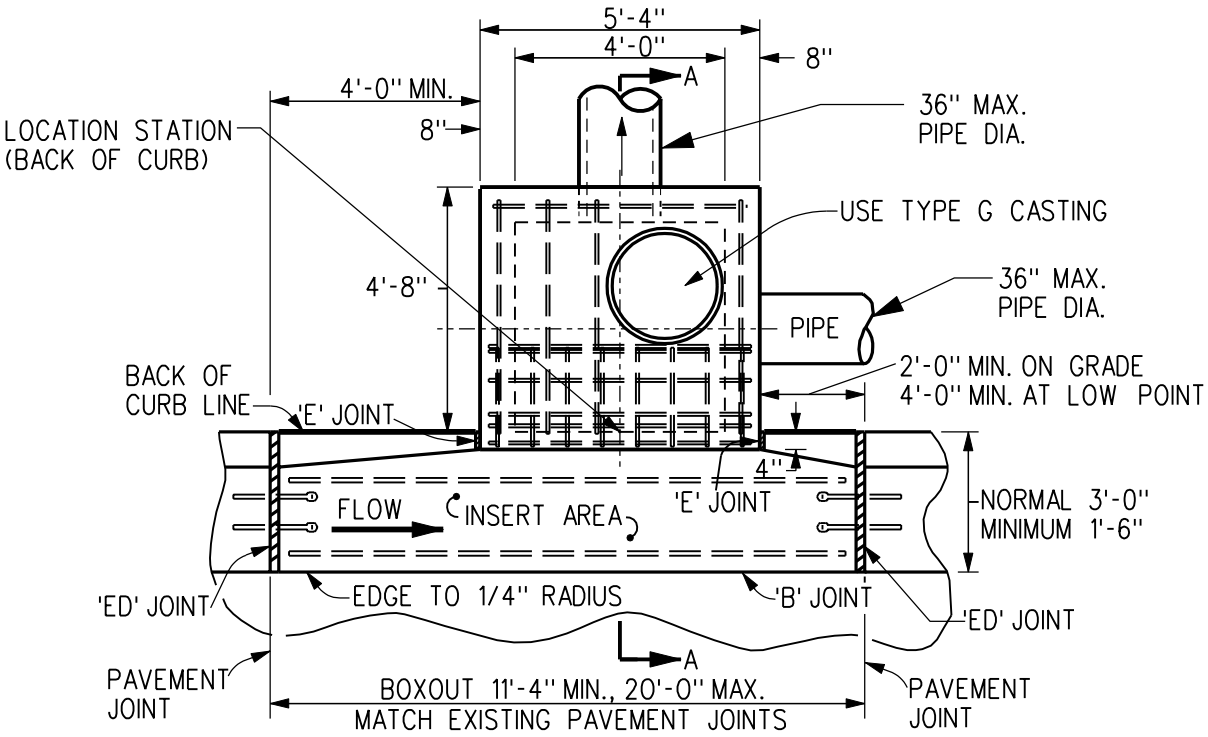

PLAN VIEW

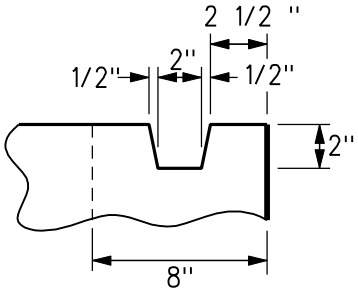

KEYED CONSTRUCTION JOINT DETAIL

PLACING SEQUENCE: 1. BASE; 2. WALLS; 3. INSERT; 4. TOP

REINFORCING BAR LIST						
MARK	SIZE	LOCATION	SHAPE	NO.	LENGTH	SPACING
a1	4	BASE	—	5	5'-0"	14"
a2	4	BASE	—	5	5'-0"	14"
b1	4	TOP	—	7	5'-0"	SEE DETAIL
b2	4	TOP	—	4	4'-4"	SEE DETAIL
b3	4	TOP	—	8	1'-10"	SEE DETAIL
c1	4	INSERT	—	4	10'-4"	11'-4" INSERT
					19'-4"	20'-0" INSERT

GENERAL NOTES:

ANY TRANSVERSE PAVEMENT JOINTS SHALL STOP AT EDGE OF INSERT AREA. JOINT LOCATIONS SHALL BE AS INDICATED HEREON, EXCEPT WHERE SPECIFICALLY MODIFIED BY OTHER PLAN DRAWINGS OR BY THE ENGINEER. JOINT AT END OF INSERT SHALL EXTEND THROUGH TO AN OPPOSITE FORM LINE.

PIPE SIZE:

MAXIMUM ALLOWABLE PIPE DIAMETERS SHOWN ARE FOR CAST-IN-PLACE STRUCTURES. FOR PRECAST STRUCTURES, THE MAXIMUM ALLOWABLE DIAMETER SHALL BE ONE (1) STANDARD PIPE SIZE SMALLER THAN THOSE SHOWN. ACTUAL PIPE SIZE SHALL BE AS SHOWN ON THE PLANS.

FOR ADDITIONAL DETAILS
SEE SHEET 2.

REV.	DATE	BY
2	10/21/03	

DATE: 01-01-98

"OPEN THROAT" TYPE M-F (MODIFIED) INTAKE
(SIMILAR TO IOWA DOT RA-40)

FIGURE: 6030.7A

SHEET 1 OF 2

NOTE: SHAPE OF CURB SHOWN IS FOR NORMAL 6" CURB, DESIGN MAY BE MODIFIED TO ACCOMMODATE OTHER CURB DESIGN WHEN NECESSARY

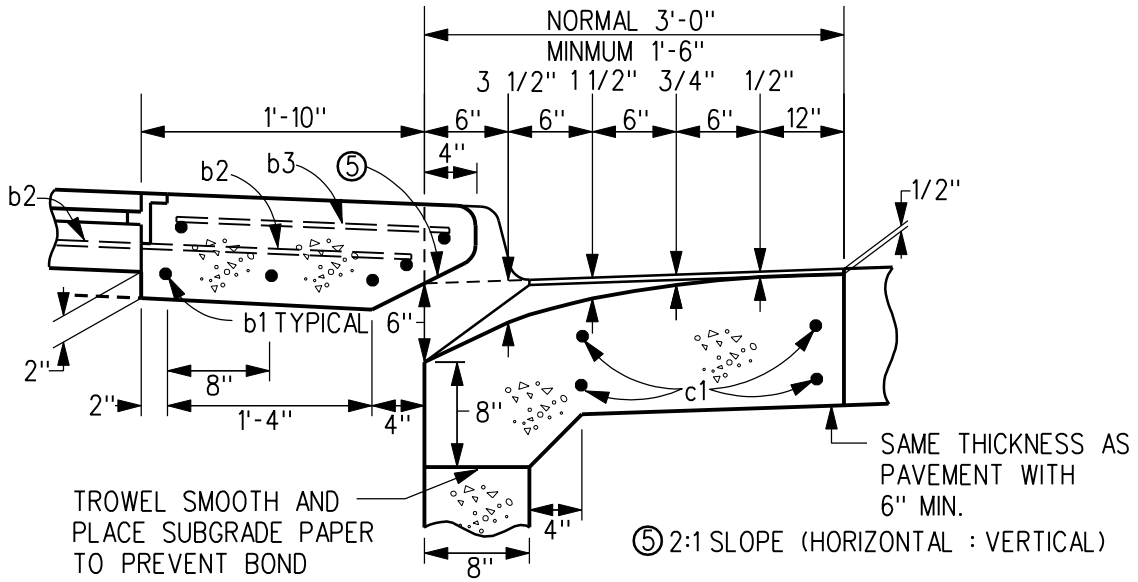

INSERT DETAILS

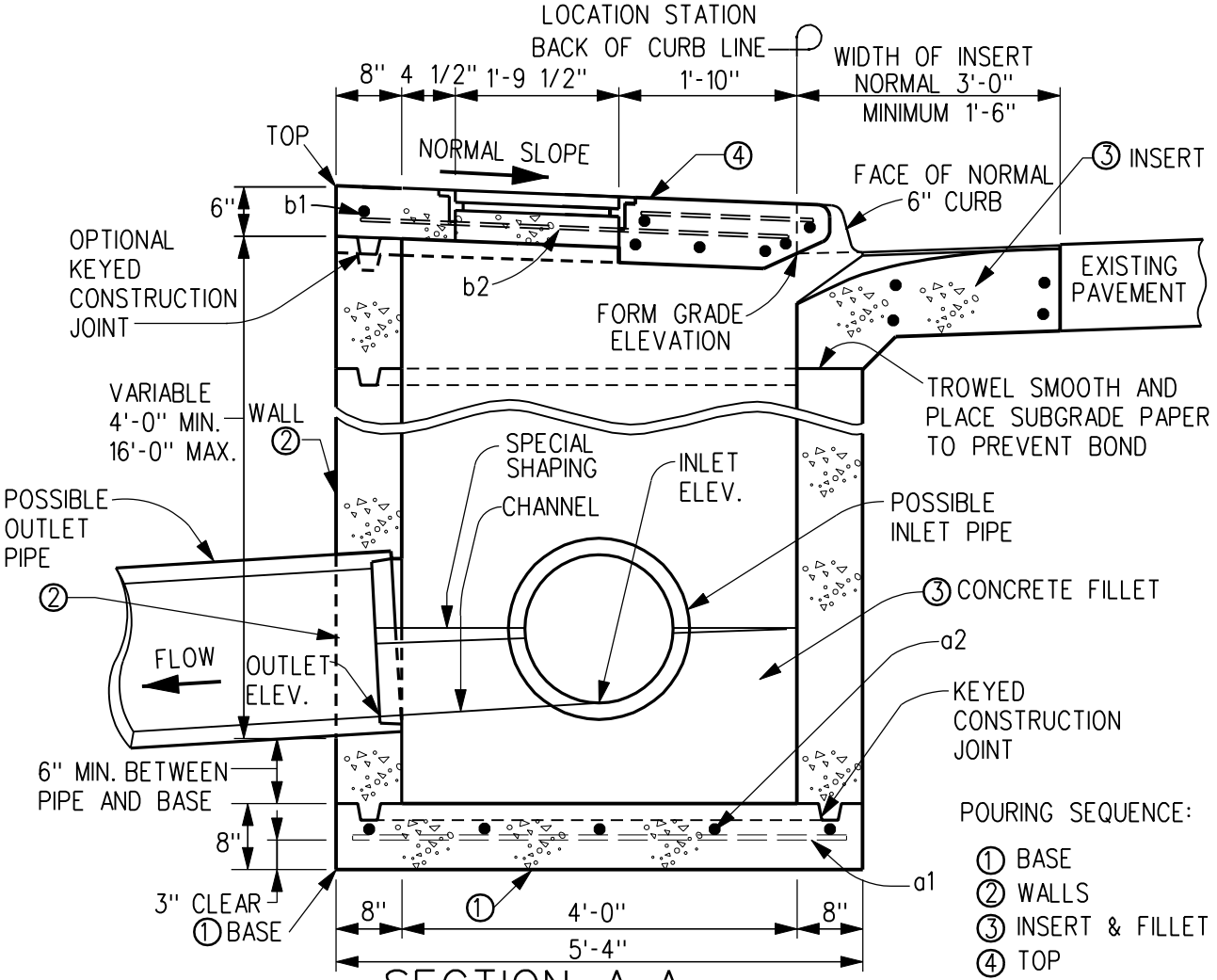

POURING SEQUENCE:

① BASE
② WALLS
③ INSERT & FILLET
④ TOP

SECTION A-A

REV.	DATE	BY		
2	10/21/03		"OPEN THROAT" TYPE M-F (MODIFIED) INTAKE (SIMILAR TO IOWA DOT RA-40)	FIGURE: 6030.7A
DATE: 01-01-98				SHEET 2 OF 2