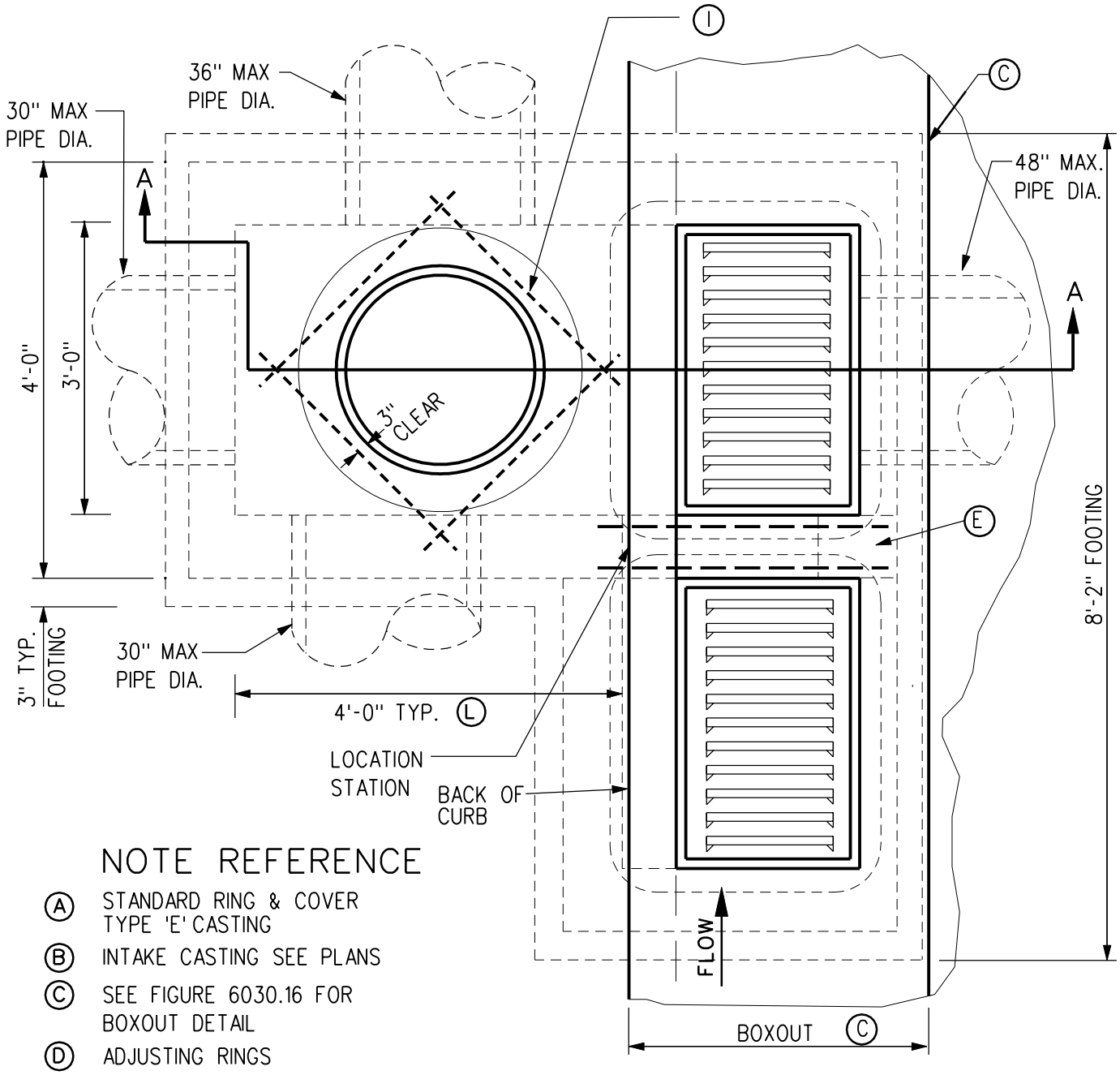

PLAN VIEW

NOTE REFERENCE

- (A) STANDARD RING & COVER TYPE 'E' CASTING
- (B) INTAKE CASTING SEE PLANS
- (C) SEE FIGURE 6030.16 FOR BOXOUT DETAIL
- (D) ADJUSTING RINGS
- (E) 8" X 8" CONCRETE BEAM WITH 4 - #4 BARS. CONSTRUCT WITH TOP SLAB.
- (F) CONCRETE BASE-POURED IN PLACE OR PRECASTED
- (G) UNDISTURBED SOIL
- (H) CONCRETE SHAPED INVERT
- (I) 4- #4 BARS 3'-0" DIAG. AROUND CIRCULAR OPENINGS
- (J) NEAR WALL SHOWN OUT OF SECTION
- (K) OPTIONAL CONSTRUCTION JOINT. SECURE WITH KEYWAY (SHOWN) OR #4 x 12" REBAR DOWELS AT 12" SPACING ALL AROUND.
- (L) WHEN REQUIRED, INCREASE WIDTH OF MANHOLE WALL TO 4'-6" AND BASE TO 8'-2" TO ACCOMODATE 36" PIPE

FOR ADDITIONAL NOTES & DETAILS SEE SHEET 2.

REV.	DATE	BY	DOUBLE, TYPE "M-E" INTAKE COMBINATION	FIGURE: 6030.6
2	10/21/03			
DATE: 01-01-98				SHEET 1 OF 2

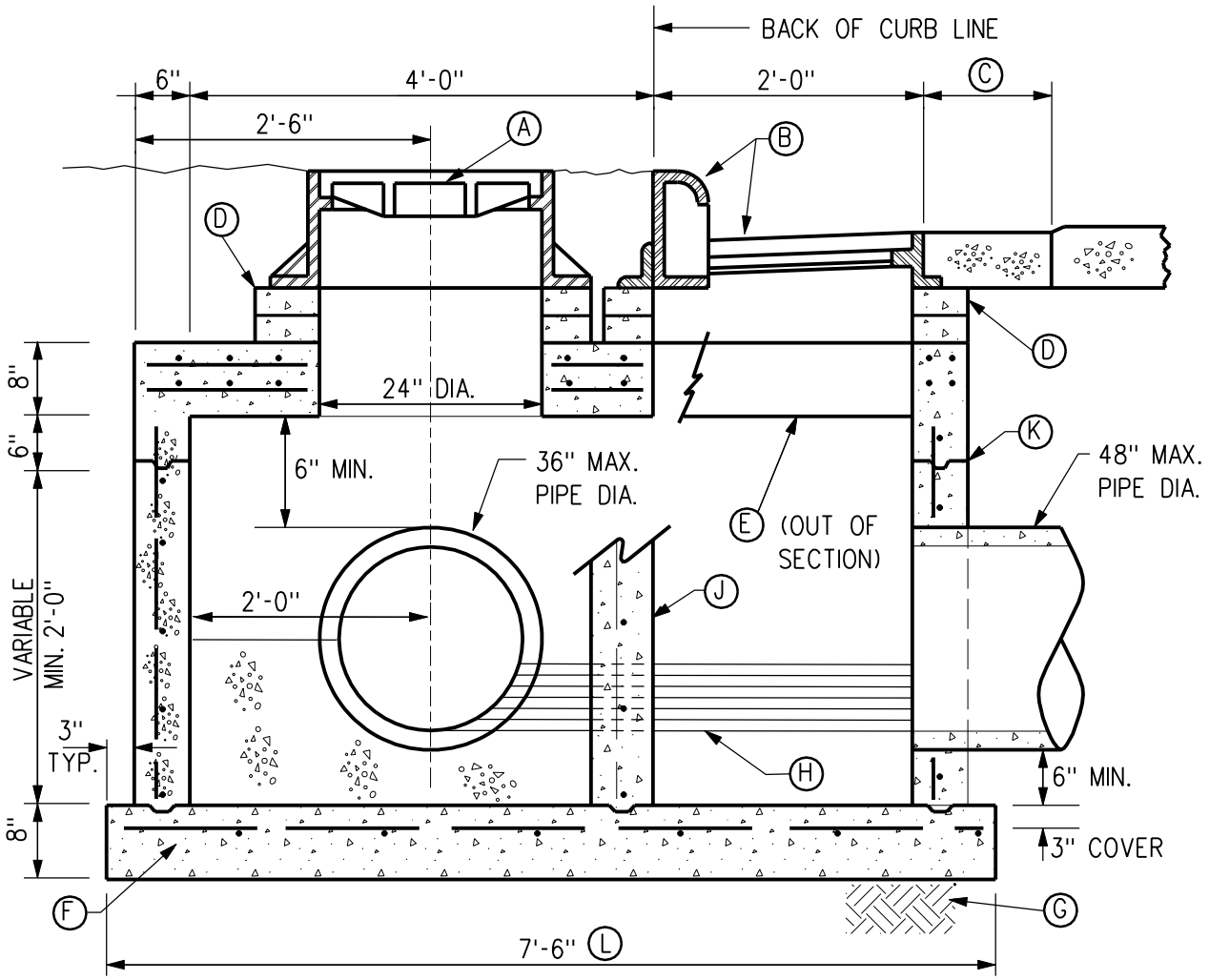

SECTION A-A

REINFORCING BARS:

1. ALL BARS #4
2. WALLS-ONE CURTAIN AT 12" EACH WAY
3. TOP SLAB-2 LAYERS SPACED AS SHOWN, 12" MAX. C-C EACH WAY.
4. BOTTOM-12" EACH WAY

MAX. DEPTH: 7' FROM TOP OF CURB TO INVERT

PIPE SIZE:

MAXIMUM ALLOWABLE PIPE DIAMETERS SHOWN ARE FOR CAST-IN-PLACE STRUCTURES. FOR PRECAST STRUCTURES, THE MAXIMUM ALLOWABLE DIAMETER SHALL BE ONE STANDARD PIPE SIZE SMALLER THAN THOSE SHOWN. ACTUAL DIAMETER SHALL BE AS SHOWN ON THE PLANS

REV.	DATE	BY	DOUBLE, TYPE "M-E" INTAKE COMBINATION	FIGURE: 6030.6
2	10/21/03			
DATE: 01-01-98				SHEET 2 OF 2