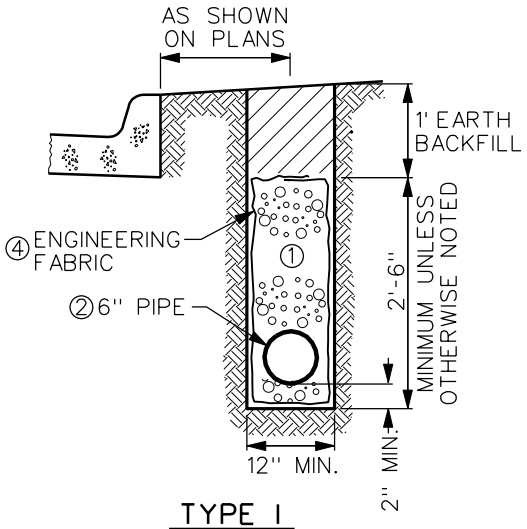

TYPE I

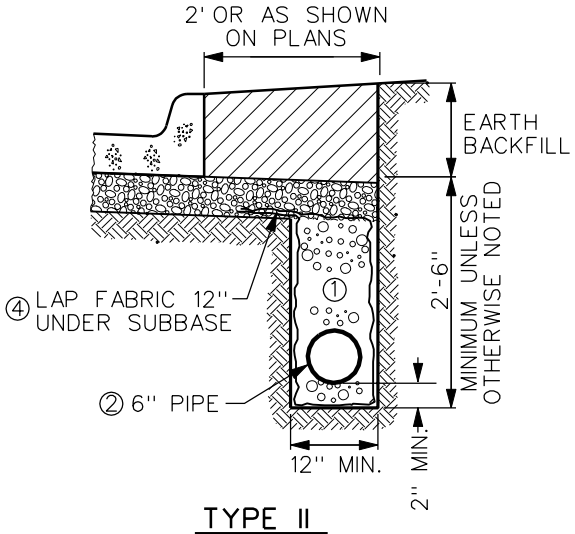

TYPE II

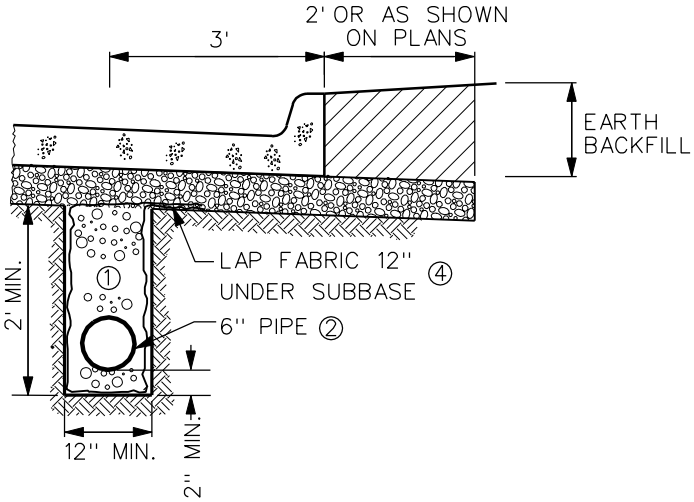

TYPE III

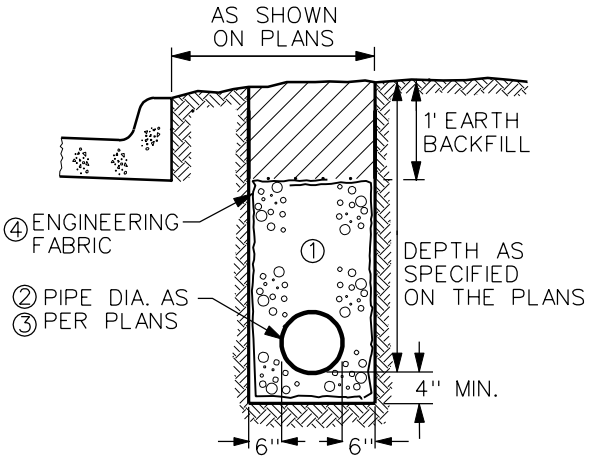

TYPE IV

COMBINATION SUBDRAIN / FOOTING DRAIN COLLECTOR

NOTES:

① BACKFILL ALL SUBDRAIN WITH POROUS BACKFILL (3010, 2.10 B)

② PLACE PERFORATIONS DOWN FOR ALL INSTALLATIONS

③ WHEN CONCRETE PIPE IS SPECIFIED, WRAP PIPE JOINTS WITH ENGINEERING FABRIC AS SHOWN IN FIGURE 4020.1A. DO NOT APPLY JOINT SEALANT.

④ WHEN SPECIFIED IN THE CONTRACT DOCUMENTS, PLACE ENGINEERING FABRIC AS SHOWN

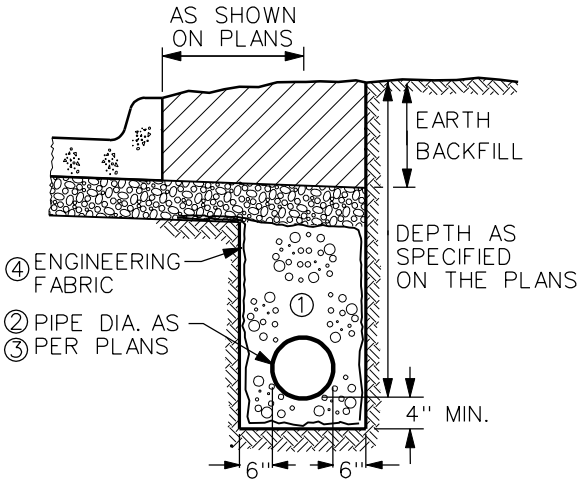

TYPE V

COMBINATION SUBDRAIN / FOOTING DRAIN COLLECTOR

REV.	DATE	BY	SUBDRAIN TYPES	FIGURE: 4020.5
DATE: 10-19-04				SHEET 1 OF 1