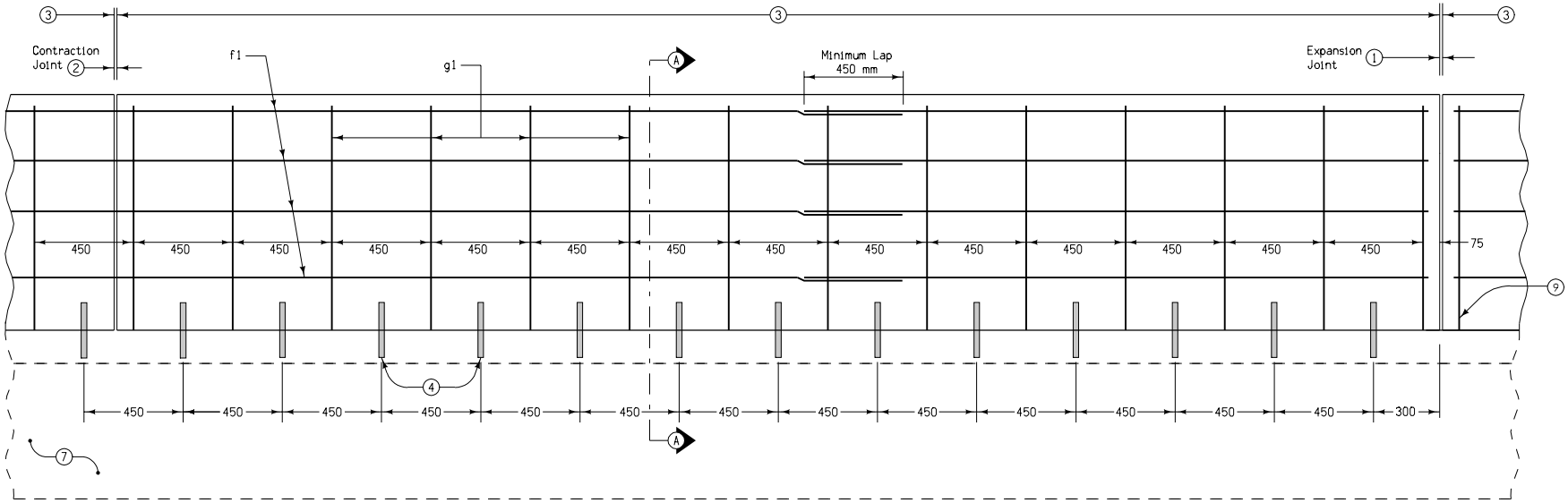

ELEVATION

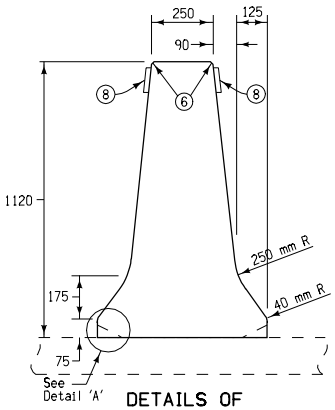

DETAILS OF F-SHAPE BARRIER FACE

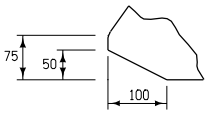

DETAIL 'A'

Special Shaping for Barrier over Intake

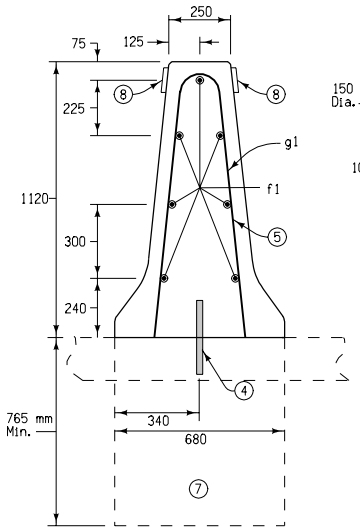

SECTION A-A

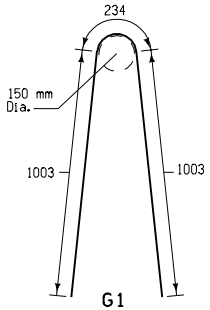

G1 BENT BAR DETAILS

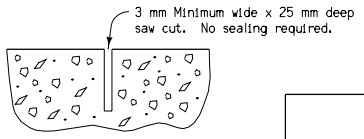

DETAILS OF CONTRACTION JOINT

Saw cut top and front face.

GENERAL NOTES:

Contract Item:

Concrete Barrier, RE-44A or
Concrete Barrier, RE-44A and Footing

1. Expansion Joints are necessary only where specifically required by project plans and the expansion material shall conform to shape of barrier. No sealer is required.
2. Contraction Joints shall be sawed as indicated hereon. Where abutting sections are placed as separate pours, a butt joint may be used. Longitudinal reinforcement shall be extended into the abutting section a minimum of 450 mm (spanning the butt joint).
3. For barrier doweled to paved shoulders, match pavement joints. For free standing barrier with integral footings, use 6.0 meter maximum, 4.5 meter minimum joint spacing.
4. 25 mm diameter deformed bars of sufficient length to ensure 150 mm minimum embedment in rail and supporting surface. Bars shall be either installed in supporting surface when placed or installed in drilled holes using polymer grout (Material's I.M. 491.13) or hydraulic cement grout (Material's I.M. 491.11).
5. Use minimum cover of 50 mm for rebars.
6. All exposed corners are to be filleted with a 20 mm dressed and beveled strip.
7. Concrete footing required when not placed on concrete slab. If footings are required, excavation shall be to neat lines. The footings may be poured without the use of forms. The Contractor may, as an option, form the footings and backfill around the completed footing.
8. Barrier markers (yellow) to be spaced at 80 meter increments in areas with continuous lighting, 30 meter increments in areas with non-continuous lighting.
9. Barrier reinforcement shall be anchored to prevent movement. Each section shall be secured at the front, back, and at 1.2 meter minimum intervals. Method of anchorage shall be approved by the Engineer.

All dimensions given in millimeters unless noted.

CONCRETE QUANTITIES
Per Meter
0.45 m^3

REINFORCING BAR LIST
Per Section (Approx. 6 meters)

Mark	Size	Number of Bars	Length	Mass (kg)
g1	15	14	2240	49.0
f1	15	7	6000	65.6

M

METRIC VERSION

Iowa Department of Transportation
Highway Division

STANDARD ROAD PLAN RE-44A

REVISION: Add reinforcement; reduce dowel spacing; show reflectors; change title.

REVISION NO. 6

REVISION DATE 10-19-04

William J. Stein
APPROVED BY DESIGN METHODS ENGINEER

1120 mm CONCRETE MEDIAN BARRIER (FULL SECTION)