BENT BAR DETAILS

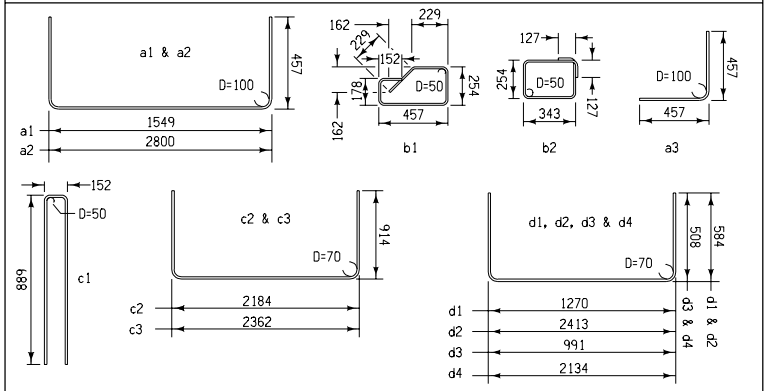

NOTE: ALL DIMENSIONS SHOWN OUT TO OUT. D = PIN DIAMETER

EPOXY COATED REINFORCING

MARK	SIZE	DESCRIPTION	SHAPE	NO.	LENGTH	MASS
a1	15	CAP		8	2463	39
a2	15	CAP		10	3714	58
a3	15	CAP, CORNERS		4	914	6
b1	10	CAP, TIES		14	1499	21
b2	10	CAP, TIES		10	1448	11
c1	10	SIDES, VERTICAL		24	1930 ①	36
c2	10	SIDES, HORIZONTAL		10	4012	31
c3	10	SIDES, HORIZONTAL		8	4190	26
d1	10	BOTTOM		7	2438	13
d2	10	BOTTOM		5	3581	14
d3	10	BOTTOM		6	2007	9
d4	10	BOTTOM		4	3150	10
e1	10	PIPE ENTRANCE		VAR.	VAR.	
TOTAL (kg.) NOT INCLUDING e1						274

Note
① Size and/or depth of pipe may require higher side walls for the intake. Adjust length of c1 reinforcing bars as necessary.

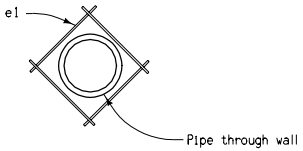

PIPE REINFORCING DETAIL

TO BE USED AT ALL PIPE ENTRANCES

Notes:
e1 bar length to be pipe diameter plus 300 millimeters. Eight e1 bars required per pipe entrance. e1 bar to be placed inside of vertical reinforcing. Main reinforcing bars to be shifted as required for pipe entrance.

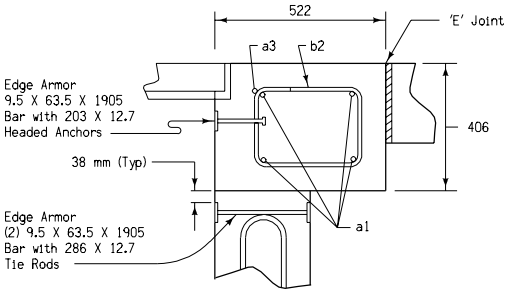

DETAIL A

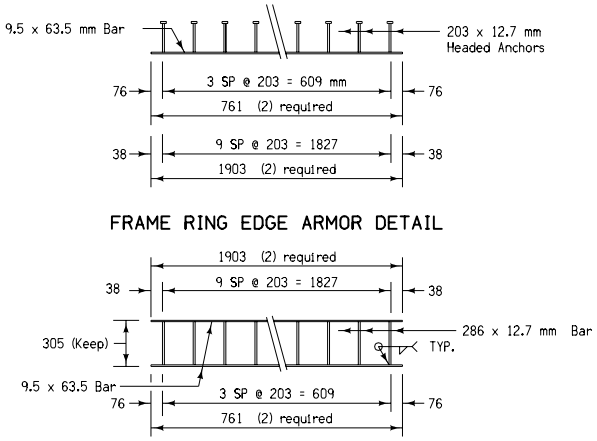

FRAME RING EDGE ARMOR DETAIL

WALL EDGE ARMOR DETAIL

All edge armor steel to be ASTM A36, galvanized after fabrication

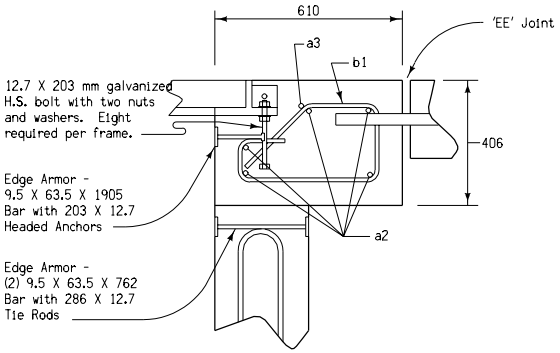

DETAIL B

All dimensions given in millimeters unless noted.

M

METRIC VERSION

Iowa Department of Transportation
Highway Division

STANDARD ROAD PLAN **RA-47(2)**

REVISION: Changed 'K' Joint to an 'E' Joint on Detail A.

REVISION NO.	REVISION DATE
2	10-29-02

APPROVED BY DESIGN METHODS ENGINEER

MEDIAN INTAKE

(Sheet 2 of 3)