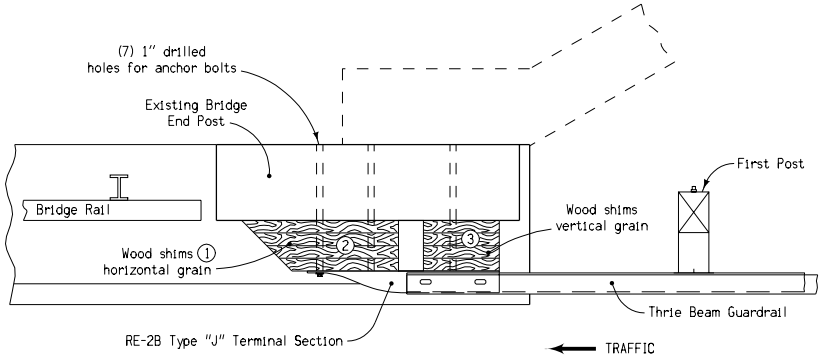


PLAN

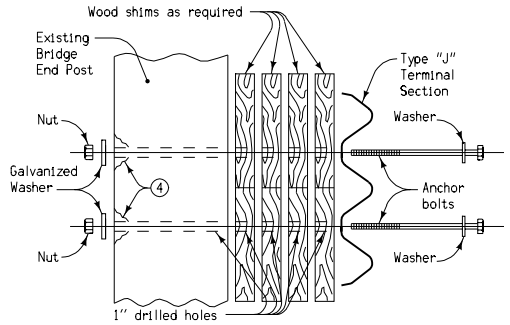


TYPICAL ATTACHMENT DETAIL

GENERAL NOTES:

Pressure preservative treated wood shims, drilled and fitted as shown.

Contract Item:

Guardrail, End Anchorage, Beam, RE-27B

List of Materials for the RE-27B End Anchorage:

(7) Approved 7/8" x sufficient length Hex Bolts
(7) Approved Plain Washers, 15/16" Regular
(7) Galvanized Steel Washers (4" x 4" x 3/8")
(7) Approved 7/8" Hex Nuts
(1) RE-2B Type "J" Terminal Section

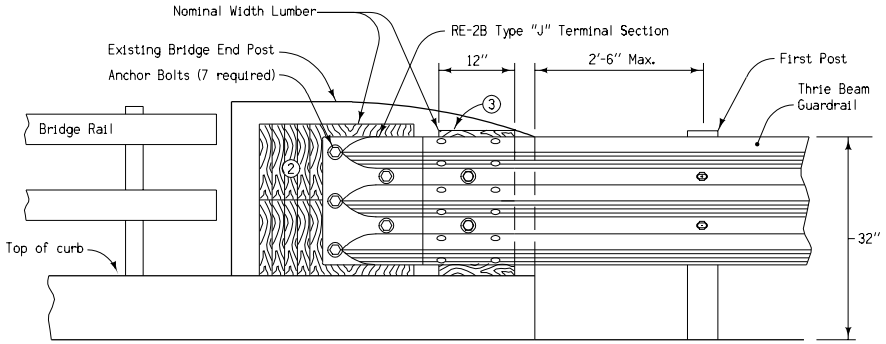


ELEVATION

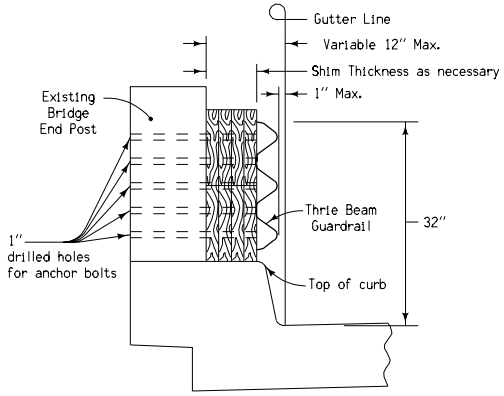


TYPICAL SECTION

① When shim thickness is greater than 2 inch, a 45 ° taper will be required on the approach side.

② Wood shim – (2) 12 inch nominal width x 20 inch minimum length x variable thickness.

③ Wood shim – 12 inch nominal width x 22 inch length x variable thickness.

④ Area on back face spalled in drilling hole will be grouted before placement of washer for bolt installation. The grout shall consist of equal parts by weight of Portland Cement and concrete sand, mixed with sufficient water to form a paste.

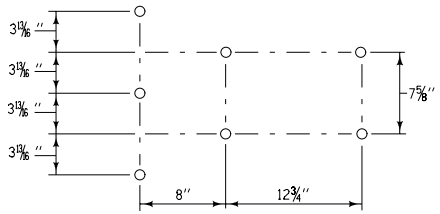


BOLT PATTERN

For RE-2B Type "J" Terminal Section

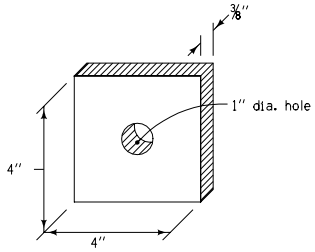


DETAIL OF GALVANIZED STEEL WASHER

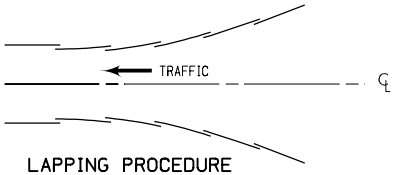


LAPPING PROCEDURE

Iowa Department of Transportation
*Highway Division*

**STANDARD ROAD PLAN** | **RE-27B**

| | |
|---|---|
| REVISION: Remove hardware information already in the Specifications Book. | REVISION NO. 5 |
| William J. Stein APPROVED BY DESIGN METHODS ENGINEER | REVISION DATE 10-19-04 |

DETAILS OF THRIE BEAM GUARDRAIL BRIDGE CONNECTION