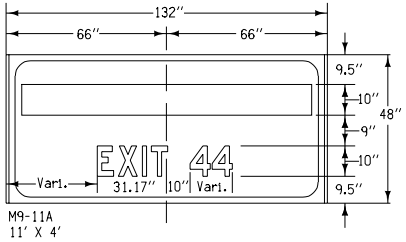

M9-11A
11′ X 4′

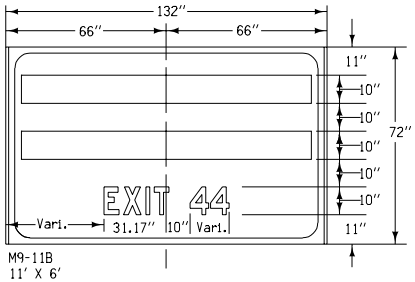

M9-11B
11′ X 6′

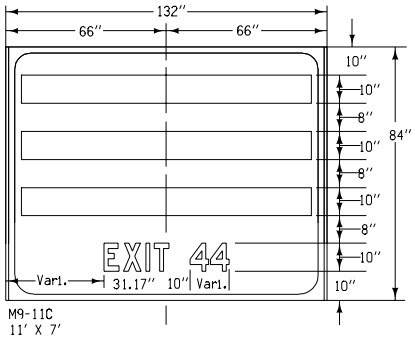

M9-11C
11′ X 7′

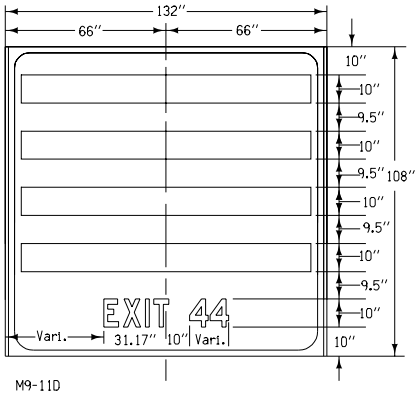

M9-11D
11′ X 9′

10″ Series 'E'

G 7.97	2.06	A 10.00	2.06	S 7.97

D 7.97	2.58	I 1.72	2.58	E 7.34	2.06	S 7.97	2.58	E 7.34	2.06	L 7.34

F 7.34	2.06	O 8.28	2.06	O 8.28	2.58	D 7.97

G 7.97	2.06	A 10.00	2.06	S 7.97	17.50	D 7.97	2.58	I 1.72	2.58	E 7.34	2.06	S 7.97	2.58	E 7.34	2.06	L 7.34

L 7.34	2.06	O 8.28	2.58	D 7.97	2.06	G 7.97	2.58	I 1.72	2.58	N 7.97	2.58	G 7.97

F 7.34	2.06	O 8.28	2.06	O 8.28	2.58	D 7.97	6″ 14.00	L 7.34	2.06	O 8.28	2.58	D 7.97	2.06	G 7.97	2.58	I 1.72	2.58	N 7.97	2.58	G 7.97

C 7.97	1.37	A 10.00	2.06	M 9.22	2.58	P 7.97	2.58	I 1.72	2.58	N 7.97	2.58	G 7.97

H 7.97	2.58	O 8.28	2.06	S 7.97	2.58	P 7.97	2.58	I 1.72	2.06	T 7.34	0.68	A 10.00	2.06	L 7.34

E 7.34	2.06	X 8.59	2.06	I 1.72	2.06	T 7.34

10″ Series 'E'

The legend is to be centered on the sign ℄ for M9-11 series.

M9-11 series — 10″ Series 'E'

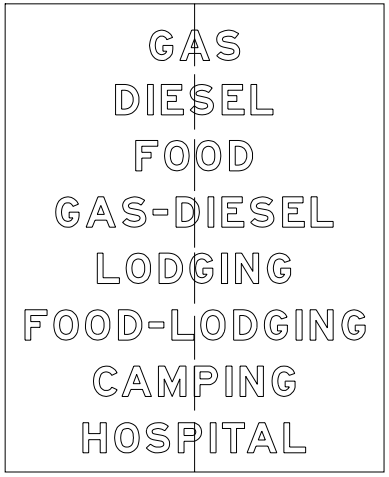

NOTE: All copy for M9-11 and M9-13 series signs shall be reflectorized unless otherwise specified on the sign type and location plan.

Refer to the 'sign type and location plan' for the legend required for the various M9-11 and M9-13 series signs listed in the summary of materials for Type 'B' signs.

NOTES: The M9-11 and the M9-13 signs are Type 'B' signs and shall be constructed with backing material composed of metal sign panels and shall have detachable copy.

Letter width, interletter spaces and symbol spacing as shown on the adjoining sign layouts.

COLOR: Letters, symbols and borders shall be as noted on the sign type and location plan sheets. Either smooth silver reflective sheeting or white nonreflective sheeting on cutout sheet metal base material.

Background material covering the sign panels shall be approved interstate blue reflective sheeting.

Iowa Department of Transportation
Highway Division

STANDARD ROAD PLAN **RD-49(2)**

REVISION: NEW	REVISION NO.
	NEW
William J. Stein	REVISION DATE
APPROVED BY DESIGN/METHODS ENGINEER	04-15-03

TYPE 'B'
INTERSTATE SERVICE SIGNS
(SHEET 2 OF 2)