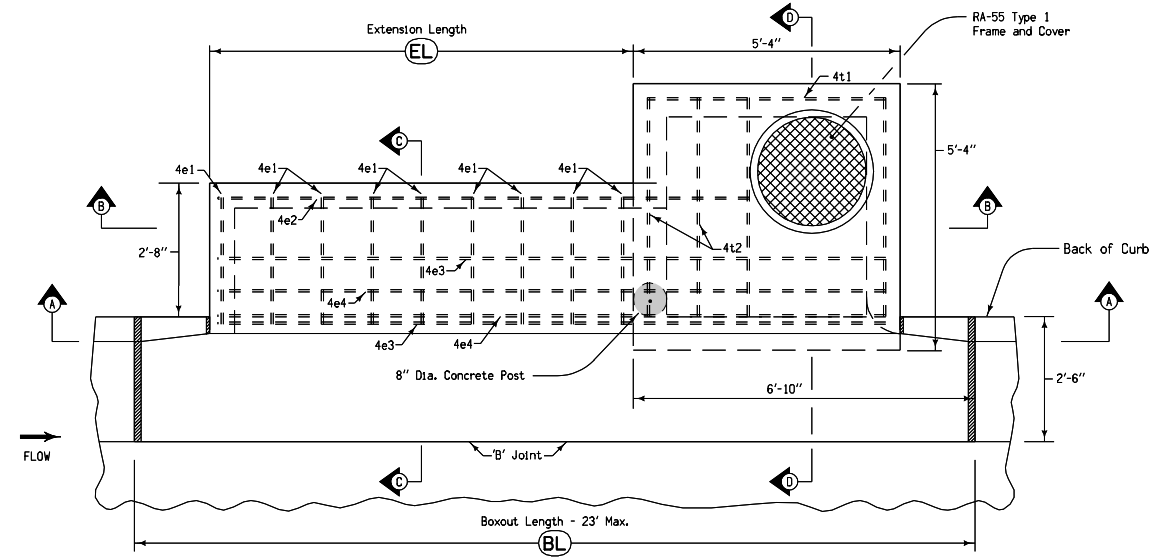

PLAN VIEW
TOP REINFORCING PLACEMENT

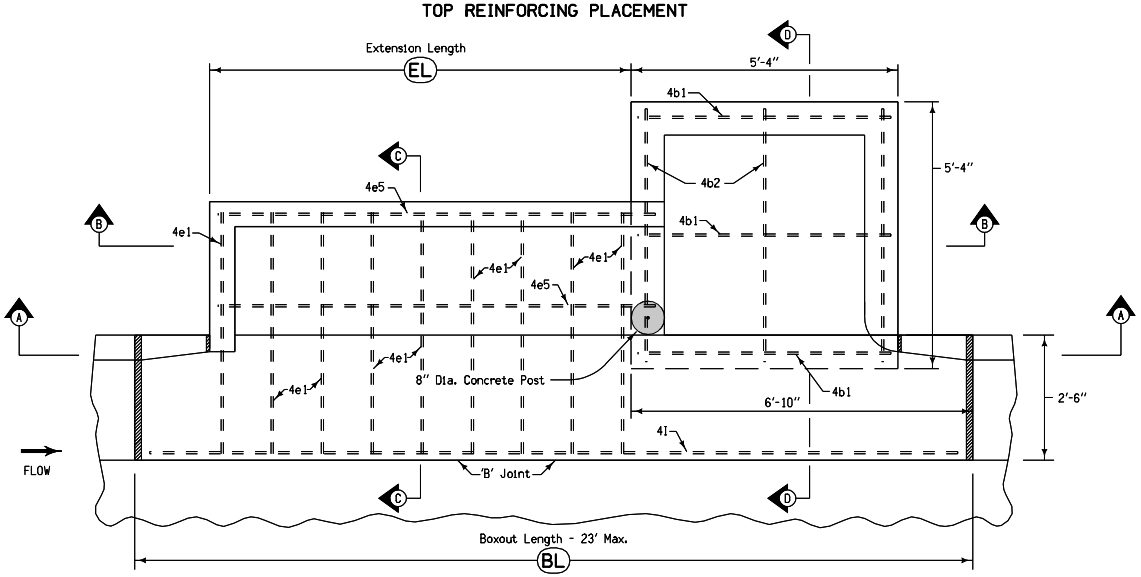

PLAN VIEW
BOTTOM REINFORCING PLACEMENT

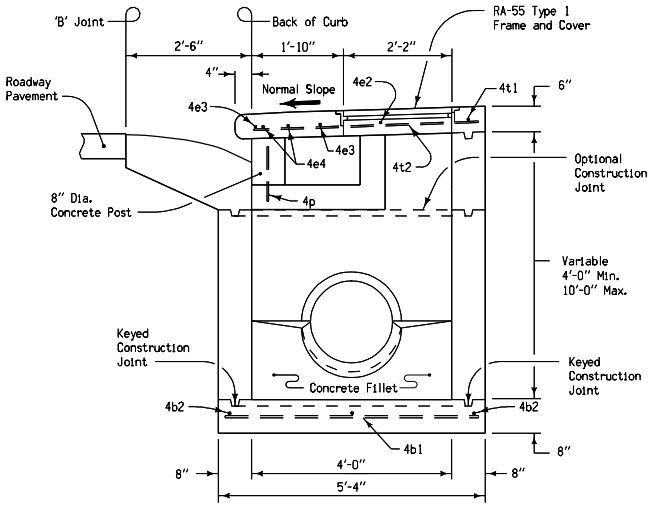

SECTION D-D

REINFORCING BAR LIST Intake Well					
MARK	LOCATION	NO.	LENGTH	WEIGHT	SPACING
4b1	Base	3	5'-0"	10.0	2'-4"
4b2	Base	3	5'-0"	10.0	2'-4"
4t1	Top	1	5'-0"	3.3	12"
4t2	Top	4	4'-6"	12.0	See Detail
4p	Post	1	13"	0.7	
			Total	36 lbs.	

Iowa Department of Transportation
Highway Division

STANDARD ROAD PLAN **RA-70(2)**

REVISION: Added special shaping of insert.

REVISION NO.
1
REVISION DATE
10-29-02

William J. Stein
APPROVED BY DESIGN METHODS ENGINEER

CURB INTAKE WITH
EXTENDED OPENING
(SHEET 2 OF 3)