CULVERT HEIGHT (H)	ANGLE	
	ØL	ØS
6'-0	31°02'	49°40'
8'-0	30°50'	48°55'
10'-0	30°43'	48°27'
12'-0	30°38'	48°09'

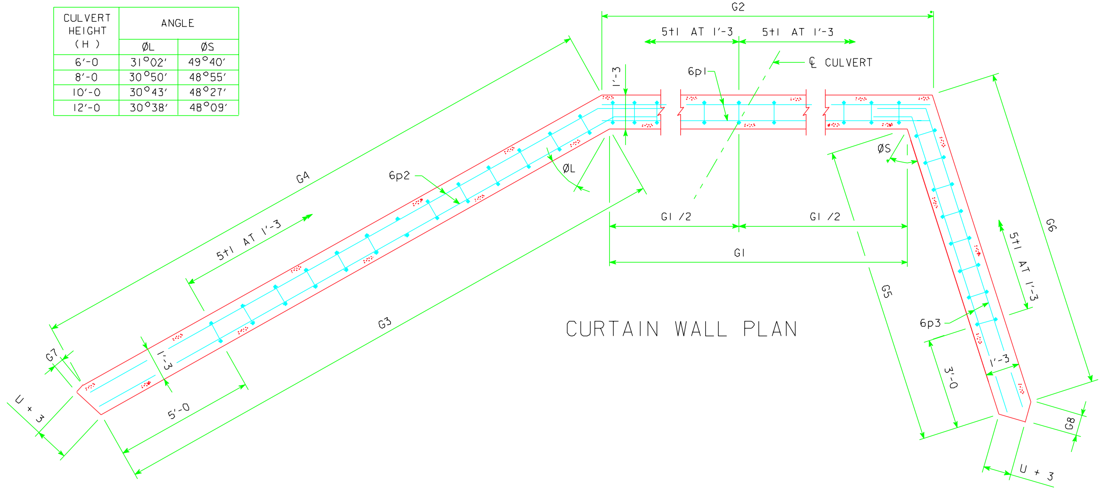

CURTAIN WALL PLAN

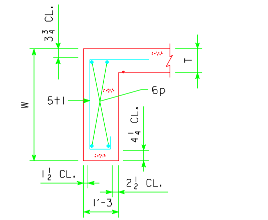

SECTION THRU CURTAIN WALL

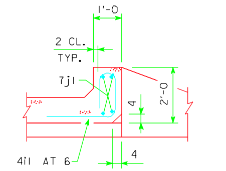

SECTION THRU PARAPET

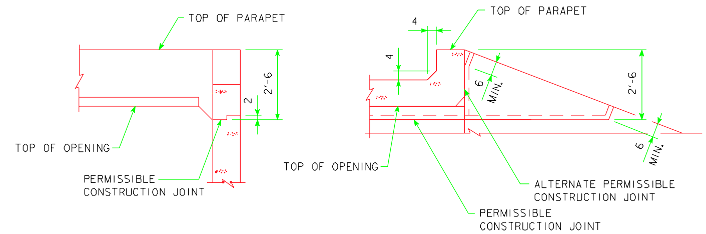

TOP OF WINGWALL DETAILS

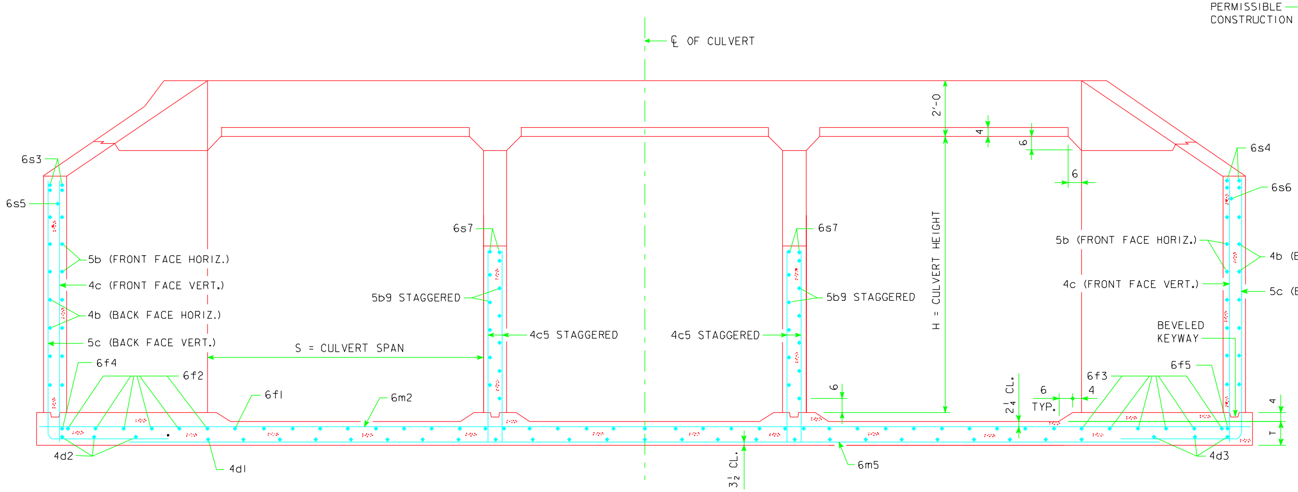

TYPICAL SECTION - NEAR CENTER OF APRON

HEADWALL NOTES:

1. SEE SHEET TRRCB-GI-01 FOR GENERAL INFORMATION, SPECIFICATIONS, AND DESIGN STRESSES.
2. FOR DIMENSION TABLE SEE SHEET TRH 30-1-01.

LATEST REVISION DATE :

APPROVED BY :

STANDARD DESIGN

FLARED WING HEADWALLS

FOR

TRIPLE REINFORCED CONCRETE BOX CULVERTS

IOWA DEPARTMENT OF TRANSPORTATION - HIGHWAY DIVISION

SEPT., 2001

TRH 30-3-01

TRH303.S01 - 09-01 THIS SHEET ISSUED.

XXXXXXXXXXSYSTEMTIME XXXXXXXUSERNAME XXXXXXXXXXXXXXXXXXXXXXXXXXXXXXXXXXXXXXXXXXXXXXXXXXXXXXXXXXXXXXXXDGNSPEC