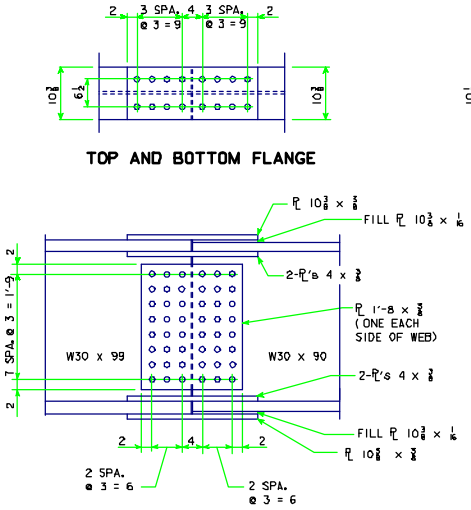

BOLTED SPLICE DETAILS

160' BEAM SPLICE

NOTE: ALL BOLTS 7/8"Φ

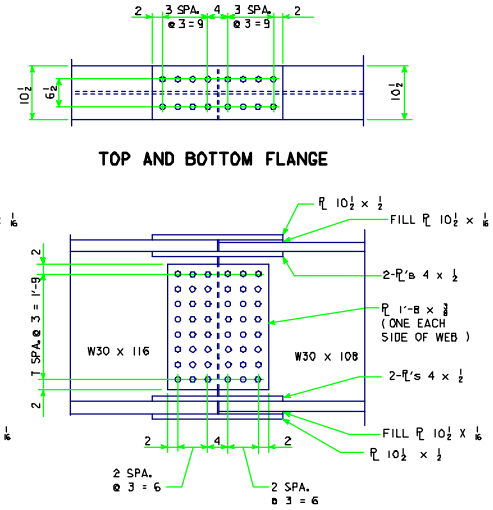

BOLTED SPLICE DETAILS

180' BEAM SPLICE

NOTE: ALL BOLTS 7/8"Φ

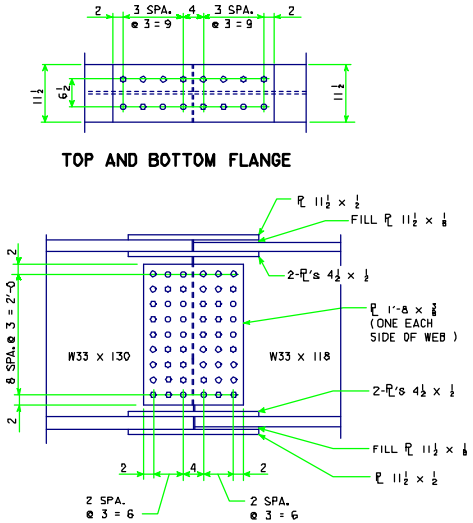

BOLTED SPLICE DETAILS

200' BEAM SPLICE

NOTE: ALL BOLTS 7/8"Φ

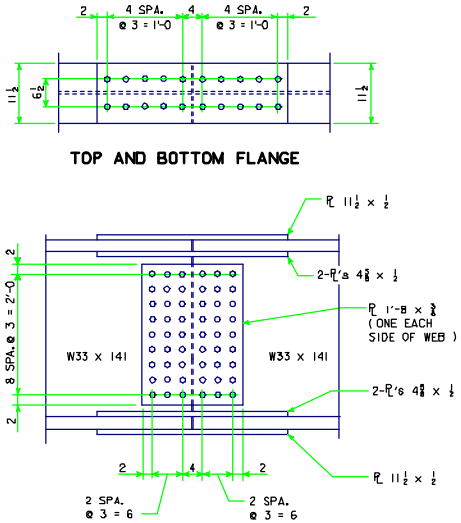

BOLTED SPLICE DETAILS

220' BEAM SPLICE

NOTE: ALL BOLTS 7/8"Φ

LATEST REVISION DATE

APPROVED BY BRIDGE ENGINEER

Iowa Department of Transportation
Highway Division

STANDARD DESIGN - 40' ROADWAY, 3 SPAN BRIDGES

ROLLED STEEL BEAM BRIDGES

FEBRUARY, 2004

BOLTED FIELD SPLICE DETAILS
SHEET 1 OF 2

RS40-SP1-04