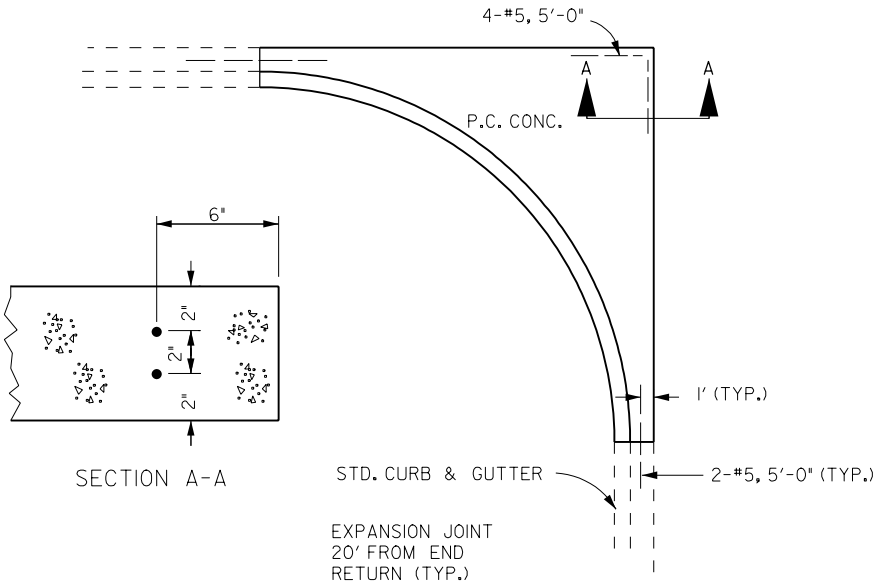

REV.	DATE	BY	END RETURN - ASPHALTIC CONCRETE PAVEMENT	FIGURE: 7020.4
DATE: 01-01-98				SHEET 1 OF 1