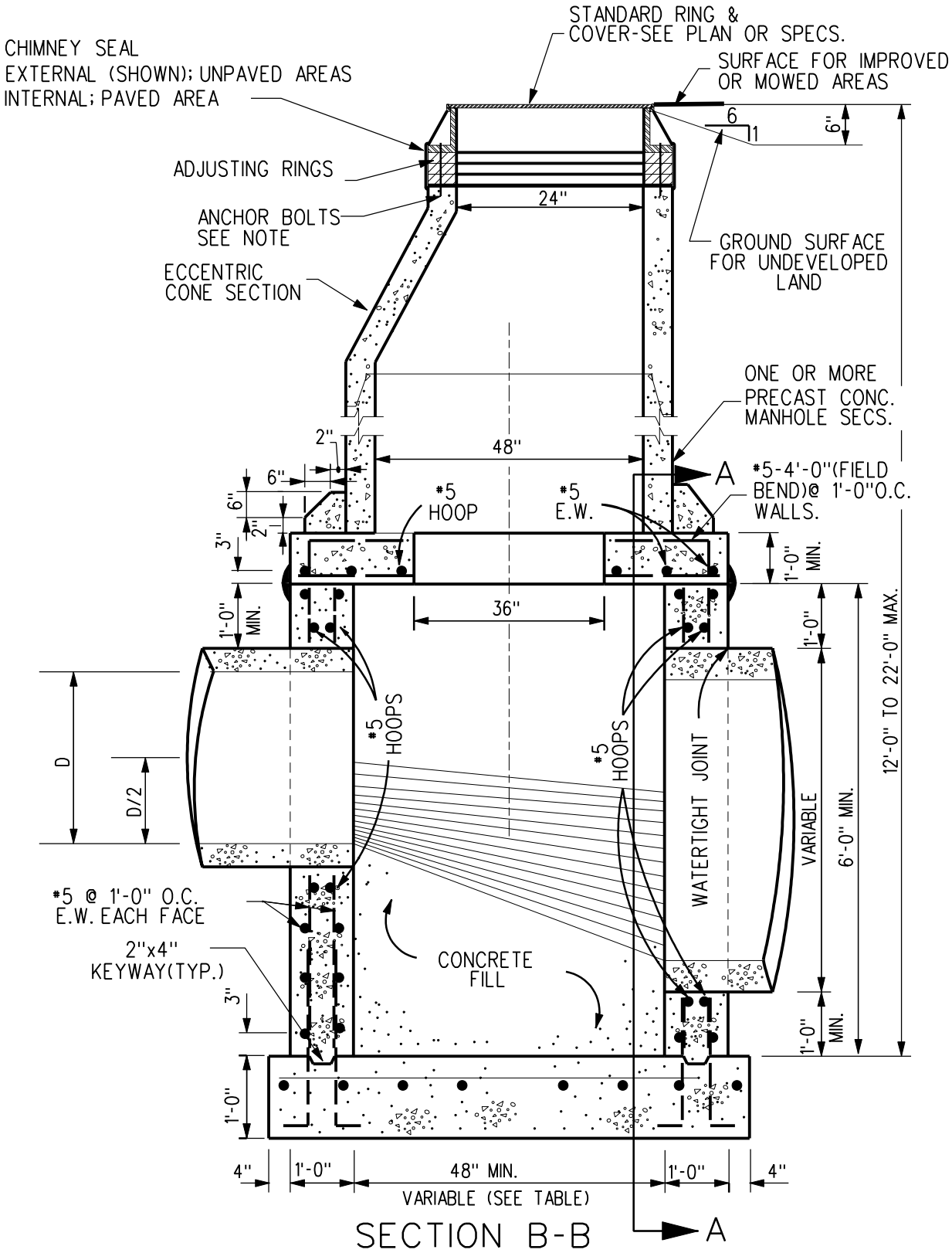

FOR ADDITIONAL DETAILS
SEE SHEETS 2 & 3.

NOTE:
MINIMUM AND MAXIMUM DEPTH AS NOTED ABOVE.
PROVIDE FOUR 1/2" ØANCHOR BOLTS FOR TYPE C OR TYPE D RING AND COVER

REV.	DATE	BY	TYPE "F" MANHOLE (SANITARY SEWER)	FIGURE: 6020.3
DATE: 01-01-98				SHEET 1 OF 3

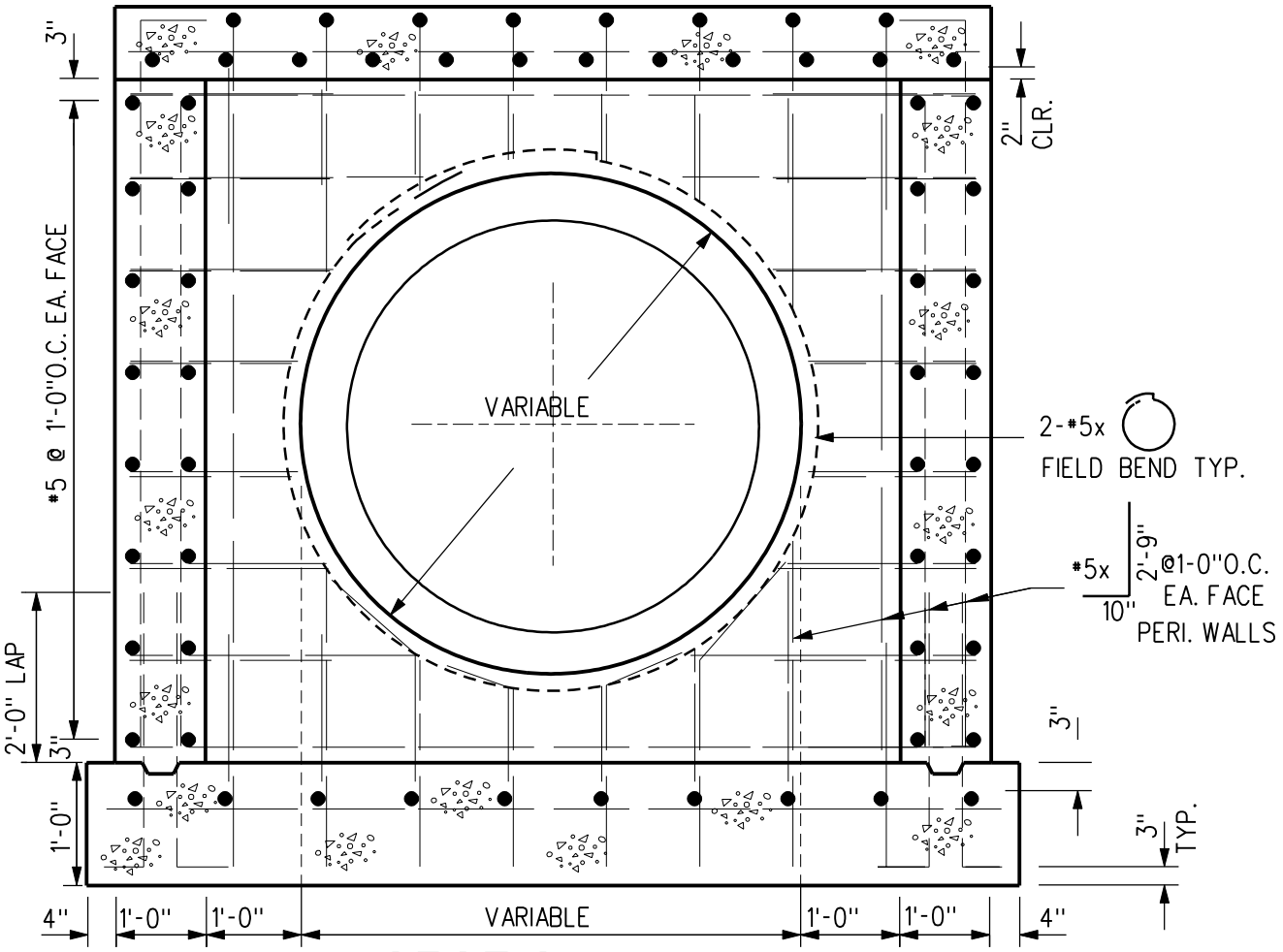

SECTION A-A

MIN. MANHOLE SIZE

PIPE SIZE INSIDE DIA.	MIN. INSIDE DIM. FOR CORR. SIDE
84"	124"
78"	117"
72"	110"
66"	103"
60"	96"
54"	89"
48"	82"
42"	75"
36"	68"
30"	61"
24"	54"
18" OR LESS	48"
NONE	48"

REV.	DATE	BY	TYPE "F" MANHOLE (SANITARY SEWER)	FIGURE: 6020.3
DATE: 01-01-98				SHEET 2 OF 3

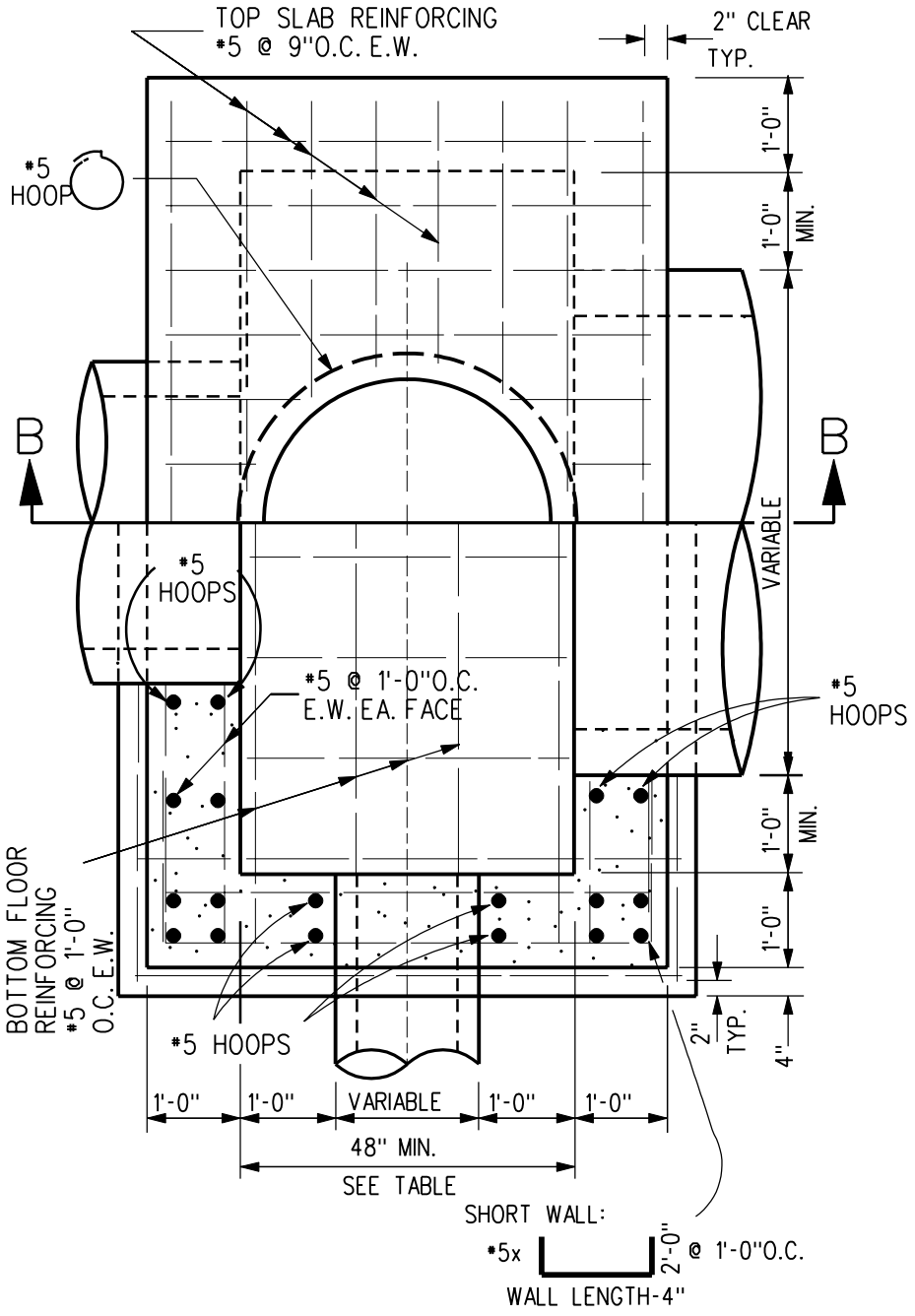

PLAN

REV.	DATE	BY	TYPE "F" MANHOLE (SANITARY SEWER)	FIGURE: 6020.3
DATE: 01-01-98				SHEET 3 OF 3