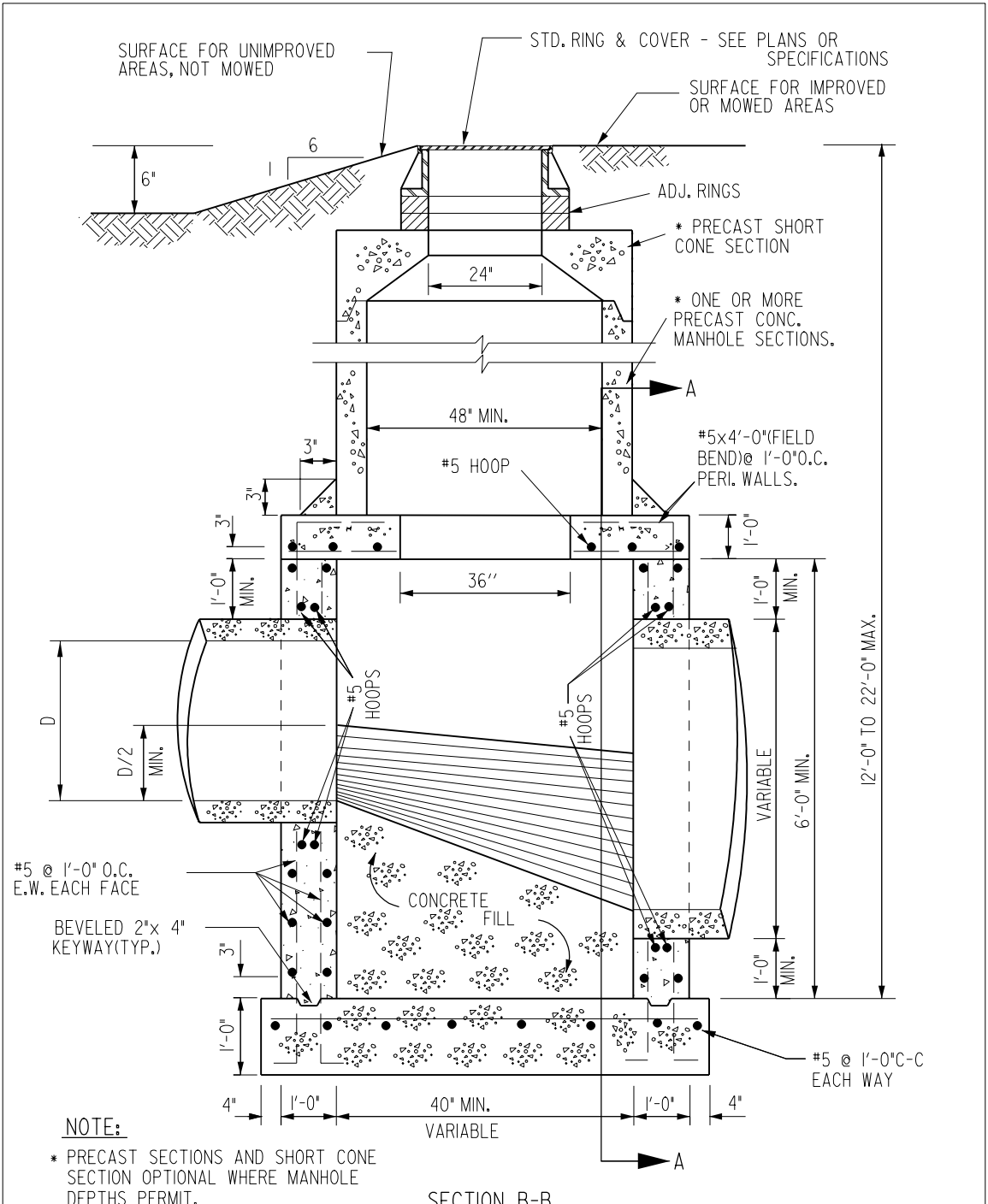

NOTE:

* PRECAST SECTIONS AND SHORT CONE SECTION OPTIONAL WHERE MANHOLE DEPTHS PERMIT.

SECTION B-B

FOR ADDITIOAL DETAILS SEE SHEETS 2 & 3.

REV.	DATE	BY	TYPE "M-D" MANHOLE (STORM SEWER)	FIGURE: 6020.15
DATE: 01-01-98				SHEET 1 OF 3

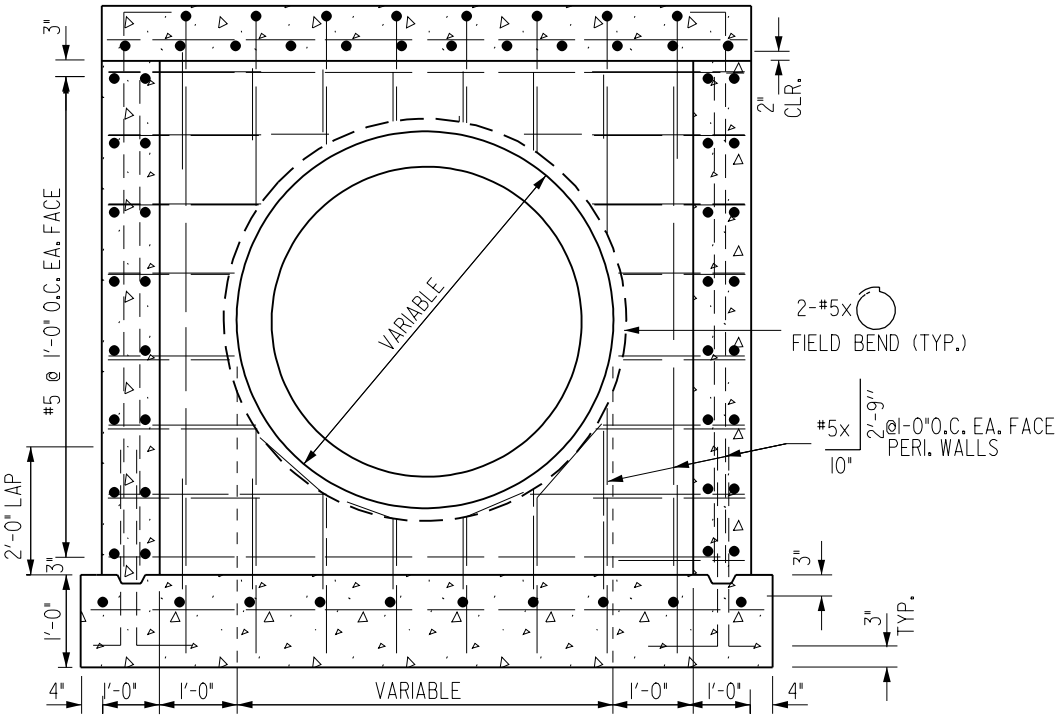

SECTION A-A

MIN. MANHOLE SIZE

PIPE SIZE INSIDE DIA.	MIN. INSIDE DIM. FOR CORR. SIDE
84"	124"
78"	117"
72"	110"
66"	103"
60"	96"
54"	89"
48"	82"
42"	75"
36"	68"
30"	61"
24"	54"
18"	47"
15"	44"
12"OR LESS	40"
NONE	40"

REV.	DATE	BY	TYPE "M-D" MANHOLE (STORM SEWER)	FIGURE: 6020.15
DATE: 01-01-98				SHEET 2 OF 3

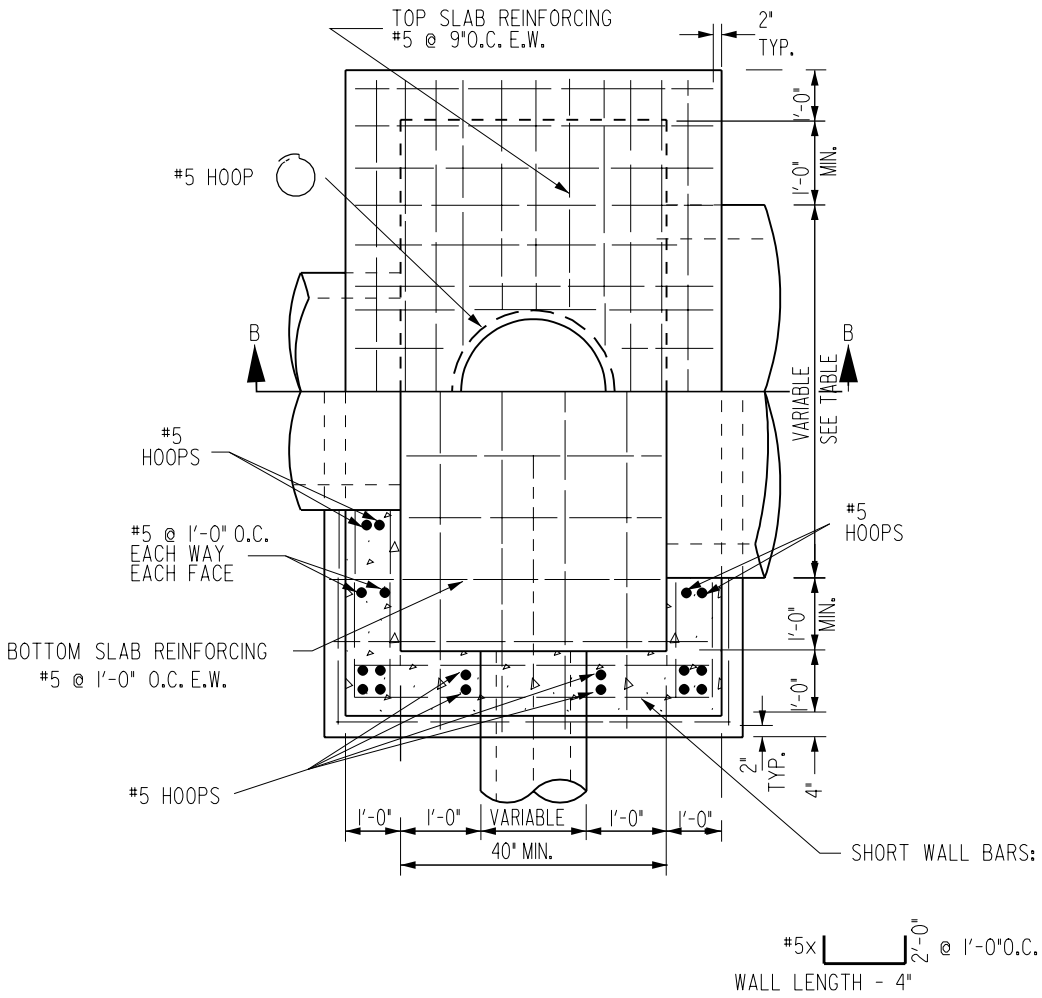

PLAN

REV.	DATE	BY	TYPE "M-D" MANHOLE (STORM SEWER)	FIGURE: 6020.15
DATE: 01-01-98				SHEET 3 OF 3