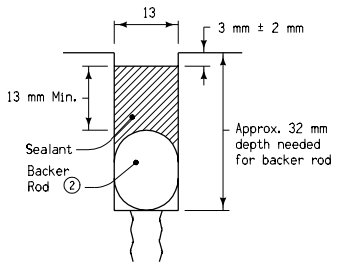

Note: Center 13 mm saw cut over the crack

CLASS I CRACK

RANDOM CRACK LESS THAN 13 mm IN WIDTH

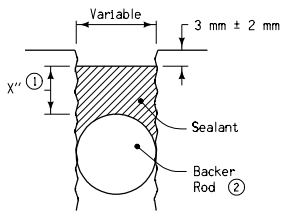

CLASS II CRACK

RANDOM CRACK 13 mm - 38 mm

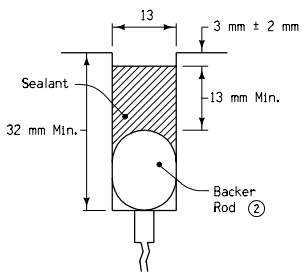

Note: Center 13 mm saw cut over existing joint

CLASS III JOINT

EXISTING JOINT LESS THAN 13 mm WIDE

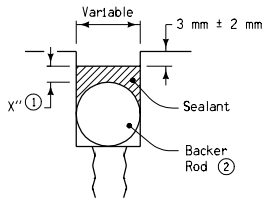

CLASS IV JOINT

EXISTING WIDTH 13 mm - 38 mm

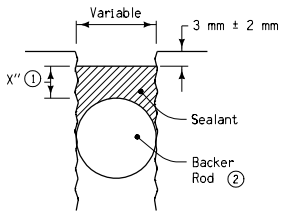

CLASS V CRACK OR JOINT

EXISTING WIDTH 38 mm - 75 mm

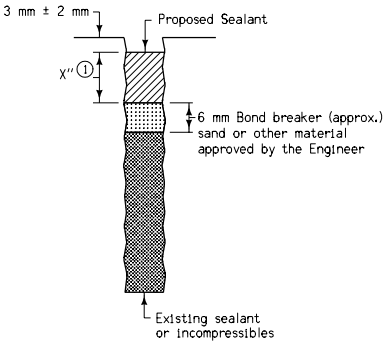

ALTERNATE BOND BREAKER FOR CLASS II CRACK CLASS IV JOINT CLASS V CRACK OR JOINT

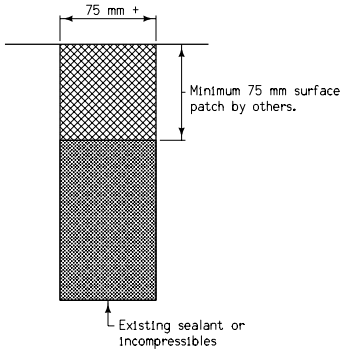

GREATER THAN 75 mm OPENING

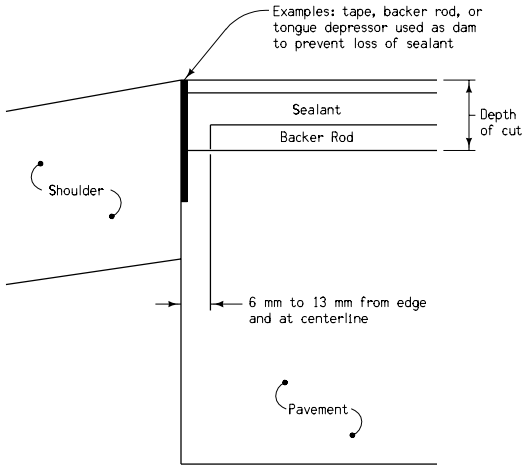

BACKER ROD PLACEMENT DETAIL

① X'' = 13 mm Minimum when width is 25 mm or less
2:1 (Width:Depth) when width is greater than 25 mm

② Minimum diameter shall be one nominal size larger than the existing crack or joint

All dimensions given in millimeters unless noted.

M

Iowa Department of Transportation
Highway Division

METRIC VERSION

STANDARD ROAD PLAN | **RR-21**

REVISION: NEW; Replaces Detail Sheet 530-9

REVISION NO.	REVISION DATE
NEW	04-30-02

William J. Stein
APPROVED BY DESIGN METHODS ENGINEER

PCC CRACK AND JOINT CLEANING AND SEALING