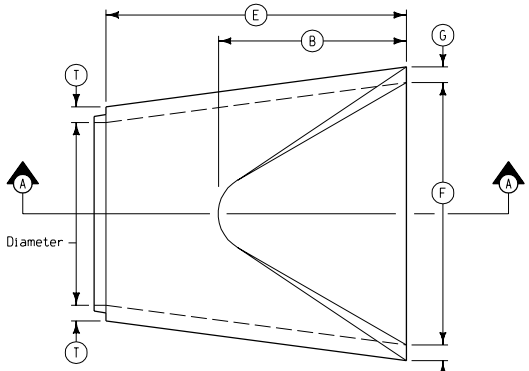

(TYPE 1 APRON)
TYPICAL PLAN VIEW

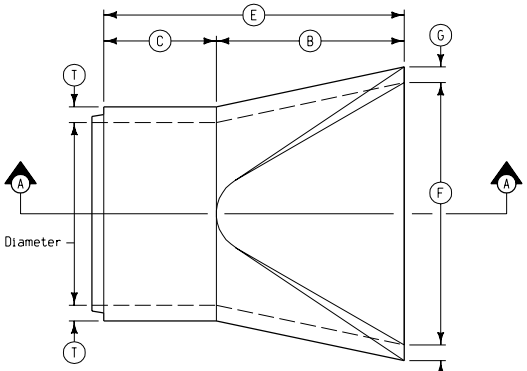

(TYPE 2 APRON)
TYPICAL PLAN VIEW

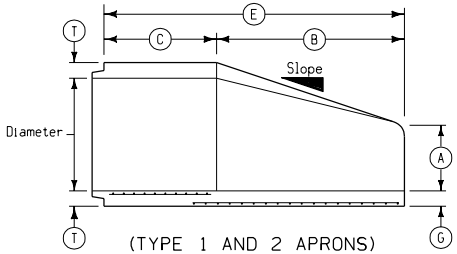

(TYPE 1 AND 2 APRONS)
TYPICAL SECTION A-A
TONGUE END DETAIL ①

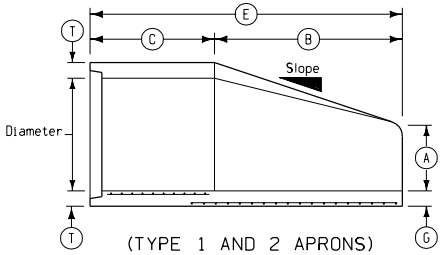

(TYPE 1 AND 2 APRONS)
TYPICAL SECTION A-A
GROOVE END DETAIL ①

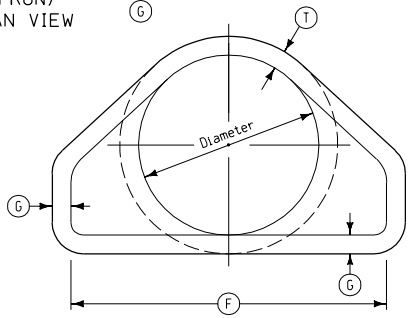

(TYPE 1 AND TYPE 2 APRONS)
TYPICAL END VIEW

TABLE OF TYPE 1 APRON DIMENSIONS								
Dia.	Slope	A	B	Minimum C	Minimum E	F	G	T
300	2.4:1	100	610	1240	1850	610	50	50
375	2.4:1	150	685	1170	1855	760	55	55
450	2.3:1	230	685	1170	1855	915	65	65
600	2.5:1	240	1105	760	1865	1220	75	75
750	2.5:1	305	1370	505	1875	1525	90	90
900	2.5:1	380	1600	840	2440	1830	100	100
1050	2.5:1	535	1600	840	2440	1980	115	115
1200	2.5:1	610	1830	610	2440	2135	125	125
1350	1.8:1	685	1525	915	2440	2285	140	140
1500	1.6:1	750	1525	915	2440	2440	140	150
1650	1.7:1	760	1830	685	2515	2440	140	150
1800	1.6:1	760	1980	535	2515	2745	150	180
1950	1.8:1	915	2285	535	2820	2895	165	190
2100	1.3:1	750	2055	775	2830	3050	165	205

TABLE OF TYPE 2 APRON DIMENSIONS								
Dia.	Slope	A	B	Minimum C	Minimum E	F	G	T
300	2.4:1	100	610	1240	1850	610	50	50
375	2.4:1	150	685	1170	1855	760	55	55
450	2.3:1	230	685	1170	1855	915	65	65
600	2.5:1	240	1105	760	1865	1220	75	75
750	2.5:1	305	1370	505	1875	1525	90	90
900	2.5:1	380	1600	840	2440	1830	100	100
1050	2.5:1	535	1600	840	2440	1980	115	115
1200	2.5:1	610	1830	610	2440	2135	125	125
1350	1.9:1	620	1650	790	2440	2285	140	140
1500	1.4:1	620	1525	915	2440	2440	140	150
1650	1.7:1	760	1830	685	2515	2440	140	150
1800	1.4:1	610	1980	535	2515	2745	150	180
1950	1.8:1	915	2285	535	2820	2895	165	190
2100	1.5:1	600	2295	535	2830	3050	165	205

GENERAL NOTES:

Details on this sheet indicate typical requirements and general installation requirements for Concrete Culvert Pipe Aprons (flared end sections). For 75 D pipe, the design of the barrel portion of apron shall meet, as a minimum, the requirements of 75 D pipe. For pipe 100 D or greater, the design of the barrel portion of the apron shall meet, as a minimum, the requirements of 100 D pipe. Reinforcement of the flared portion of apron shall be as indicated or as otherwise approved by the Engineer.

Materials and methods of construction shall be in accordance with current Standard and Supplemental Specifications.

Fabrication of pipe aprons shall conform to requirements of current Specifications for "Concrete Culvert Pipe". Dimension 'E' shown is minimum and shall be considered the design length. Any difference between the actual length of concrete apron installed and the length indicated hereon shall be appropriately adjusted for in the length of concrete culvert pipe furnished.

Tie bolts and bolt holes are necessary only when specifically required in detail project plans.

Structural concrete used for concrete aprons shall contain air entrainment in accordance with Article 2403.03 Paragraph B of the current Standard Specifications.

Alternate designs for concrete pipe aprons may be submitted for approval. Welded wire fabric shall meet the requirements of ASTM A 185.

Refer to appropriate other Standard Road Plans as well as project plans for additional details of individual culvert installations.

Reinforcing shown for barrel portion is typical. Refer to Standard Road Plan RF-1 for additional requirements.

Price bid for "Concrete Pipe Aprons" of the size specified shall be considered full compensation for fabrication and installation of concrete aprons as detailed hereon.

① Tongue end used on inlet end section. Groove end used on outlet end section. Dimensions for tongue and groove connections shall be as indicated on Standard Road Plan RF-1.

All dimensions given in millimeters unless noted.

M

Iowa Department of Transportation
Project Development Division

METRIC VERSION

STANDARD ROAD PLAN **RF-3**

REVISION: Correct 'E' dimension for 1800 mm dia. Type 1 Apron.

REVISION NO. 6

David P. Ritt 09-14-98
APPROVED BY DESIGN METHODS ENGINEER

REVISION DATE 01-12-99

CONCRETE PIPE APRONS
(FLARED END SECTIONS)