DOWEL HEIGHT AND DIAMETER		
(T)	(DH) (5)	Diameter
7.0"	3.5"	3/4"
7.5"	3.5"	3/4"
8.0"	4.25"	1 1/4"
8.5"	4.25"	1 1/4"
9.0"	4.25"	1 1/4"
9.5"	4.25"	1 1/4"
10.0"	5.25"	1 1/2"
10.5"	5.25"	1 1/2"
11.0"	5.25"	1 1/2"
11.5"	6.25"	1 1/2"
12.0"	6.25"	1 1/2"
12.5"	6.25"	1 1/2"
13.0"	6.25"	1 1/2"

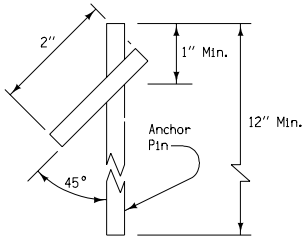

ANCHOR PIN DETAILS (1)

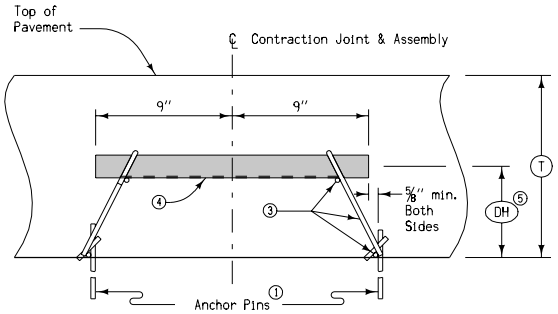

LONGITUDINAL SECTION

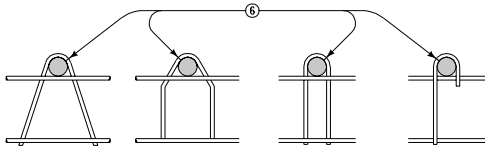

OPTIONAL LEG ASSEMBLES

GENERAL NOTES:

Dowel bars shall be 18" long with a tolerance of ± 1/8". The centerline of individual dowels shall be parallel to the other dowels in the assembly within ± 1/8".

Wire sizes shown are minimum required, and the wire shall have a minimum tensile strength of 50 KSI.

1. (8) anchor pins minimum required, 4 per side. Pins shall be #1/0 gage (.306) wire, be a minimum length of 12", and shall prevent movement of assembly during construction.
2. Weld alternately thru-out.
3. #1/0 gage (.306) wire.
4. (3) #10 gage (.135) wire, tie wire welded or friction fit to top longitudinal wire, both sides.
5. Measured from the centerline of dowel bar to bottom of support wire ±1/4".
6. Diameter of bend around dowel is dowel diameter +1/8" to 3/16".

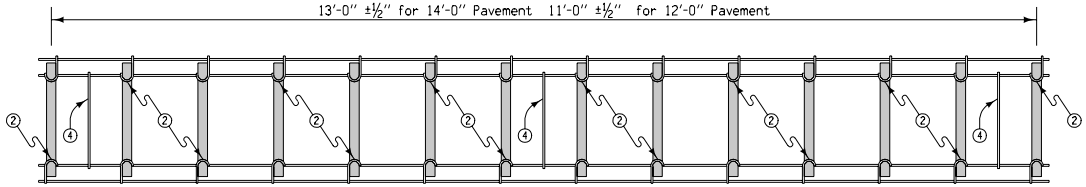

PLAN VIEW

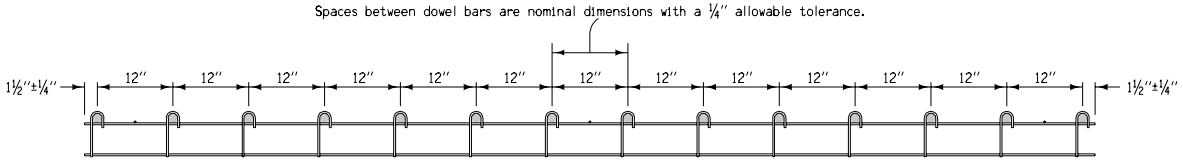

ELEVATON

Iowa Department of Transportation
Highway Division

STANDARD ROAD PLAN | **RH-55**

REVISION: Removed table containing number of dowels.

REVISION NO.
4
REVISION DATE
10-21-03

William J. Stein
APPROVED BY DESIGN METHODS ENGINEER

FABRICATION DETAILS
CONTRACTION JOINT
DOWEL ASSEMBLY