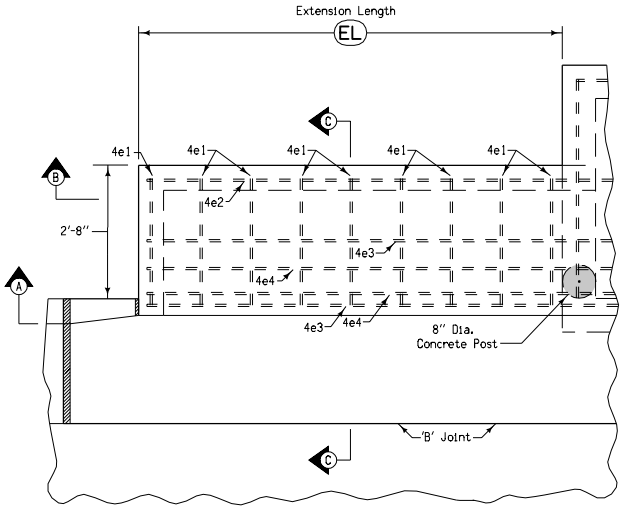

PLAN VIEW
TOP OF EXTENSION REINFORCING PLACEMENT

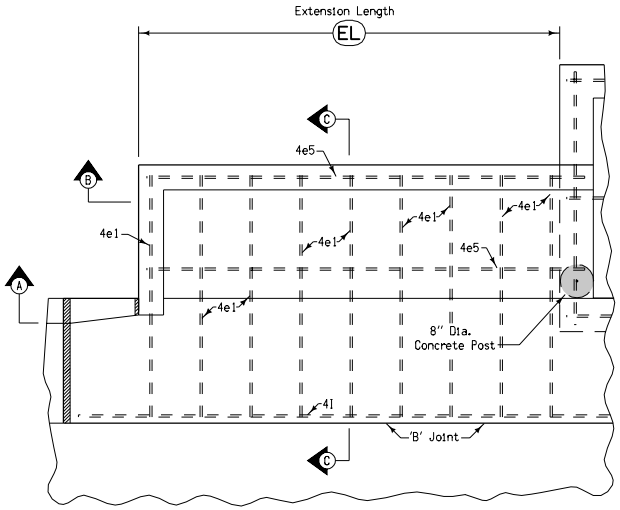

PLAN VIEW
BOTTOM OF EXTENSION REINFORCING PLACEMENT

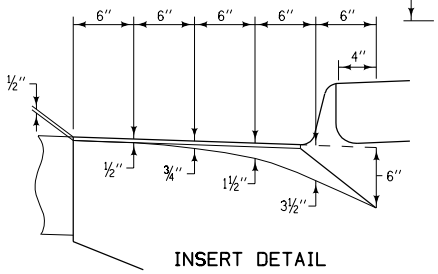

INSERT DETAIL

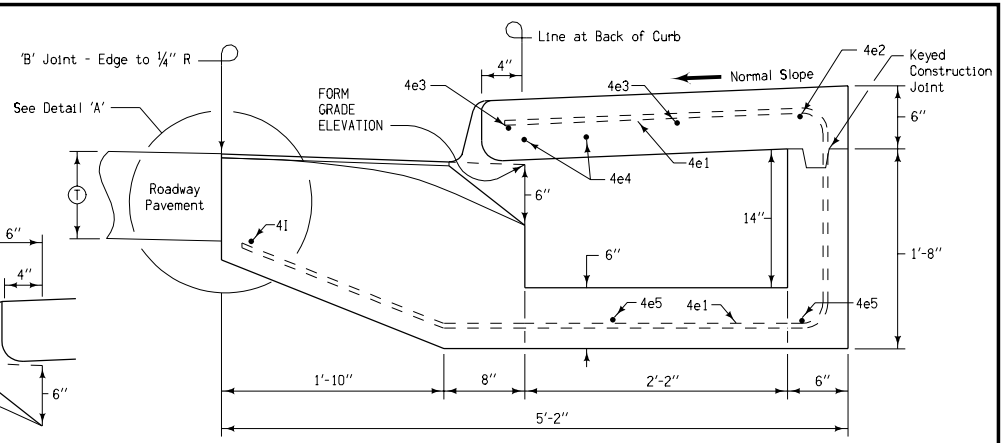

SECTION C-C

REINFORCING BAR LIST (LO) = 12'						
MARK	SIZE	LOCATION	NO.	LENGTH	MASS	SPACING
4e1	4	Top/Base	9	9'-5½"	56.9	12"
4e2	4	Top	1	10'-0"	6.7	
4e3	4	Top	2	12'-9"	17.0	15½"
4e4	4	Top	2	12'-9"	17.0	6"
4e5	4	Base	2	8'-2"	10.9	22"
4l*	4	Insert	1	15'-10"	10.6	
* With 16'-6" Boxout.				Total	119.1 lbs.	

REINFORCING BAR LIST (LO) = 14'						
MARK	SIZE	LOCATION	NO.	LENGTH	MASS	SPACING
4e1	4	Top/Base	11	9'-5½"	69.5	12"
4e2	4	Top	1	12'-0"	8.0	
4e3	4	Top	2	14'-9"	19.7	15½"
4e4	4	Top	2	14'-9"	19.7	6"
4e5	4	Base	2	10'-2"	13.6	22"
4l*	4	Insert	1	17'-10"	11.9	
* With 18'-6" Boxout.				Total	142.4 lbs.	

REINFORCING BAR LIST (LO) = 16'						
MARK	SIZE	LOCATION	NO.	LENGTH	MASS	SPACING
4e1	4	Top/Base	13	9'-5½"	82.1	12"
4e2	4	Top	1	14'-0"	9.3	
4e3	4	Top	2	16'-9"	22.4	15½"
4e4	4	Top	2	16'-9"	22.4	6"
4e5	4	Base	2	12'-2"	16.2	22"
4l*	4	Insert	1	19'-10"	13.2	
* With 20'-6" Boxout.				Total	165.6 lbs.	

REINFORCING BAR LIST (LO) = 18'						
MARK	SIZE	LOCATION	NO.	LENGTH	MASS	SPACING
4e1	4	Top/Base	15	9'-5½"	94.8	12"
4e2	4	Top	1	16'-0"	10.7	
4e3	4	Top	2	18'-9"	25	15½"
4e4	4	Top	2	18'-9"	25	6"
4e5	4	Base	2	14'-2"	18.9	22"
4l*	4	Insert	1	21'-10"	14.6	
* With 22'-6" Boxout.				Total	189.0 lbs.	

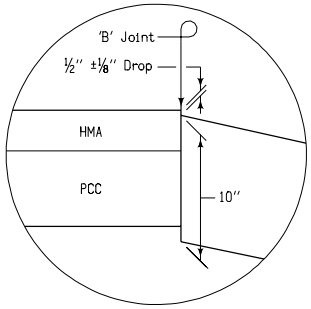

DETAIL 'A'

Use when adjacent pavement is HMA or composite.

BENT BAR DETAILS

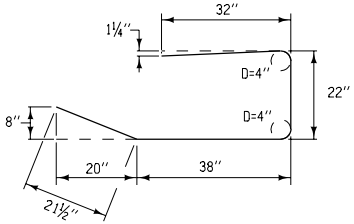

4e1

NOTE: ALL DIMENSIONS ARE OUT TO OUT
D = PIN DIAMETER

Iowa Department of Transportation
Highway Division

STANDARD ROAD PLAN **RA-70(3)**

REVISION: Added special shaping of insert.

REVISION NO.
1
REVISION DATE
10-29-02

William J. Stein
APPROVED BY DESIGN METHODS ENGINEER

CURB INTAKE WITH
EXTENDED OPENING
(SHEET 3 OF 3)