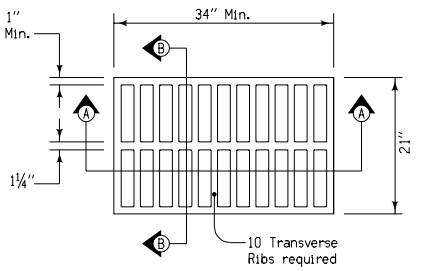

SECTION A-A

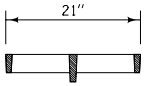

SECTION B-B

TYPE 2 GRATE
Minimum Weight = 210 lbs.

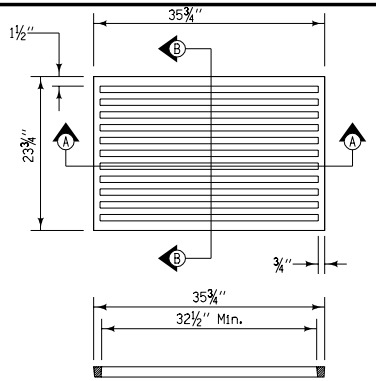

SECTION A-A

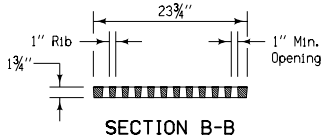

SECTION B-B

TYPE 7 GRATE
Minimum Weight = 175 lbs.

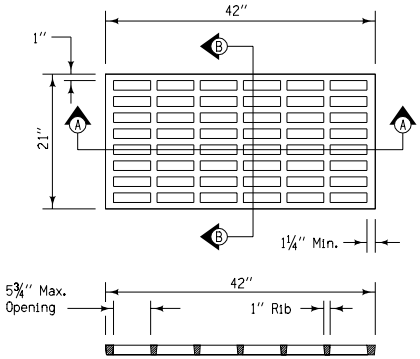

SECTION A-A

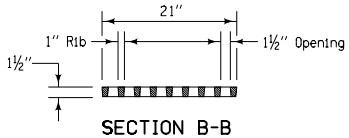

SECTION B-B

TYPE 8 GRATE
Minimum Weight = 150 lbs.

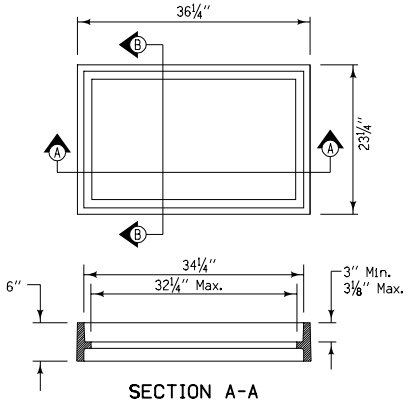

SECTION A-A

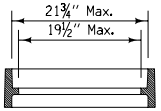

SECTION B-B

TYPE 2 FRAME
Minimum Weight = 200 lbs.

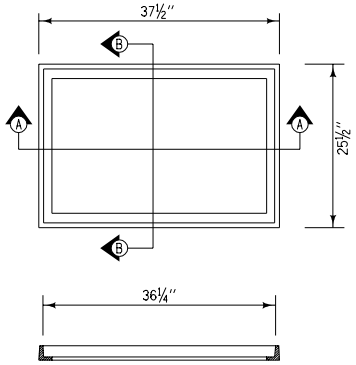

SECTION A-A

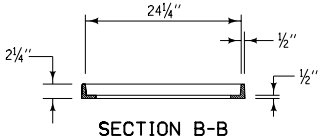

SECTION B-B

TYPE 7 FRAME
Minimum Weight = 60 lbs.

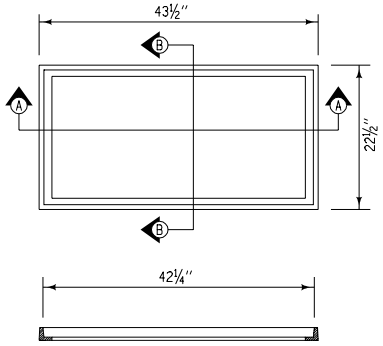

SECTION A-A

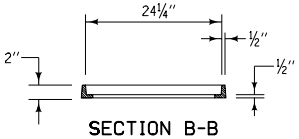

SECTION B-B

TYPE 8 FRAME
Minimum Weight = 60 lbs.

GENERAL NOTES:

Painting of casting is not required; however, if used, paint shall be evenly applied and neither sticky nor brittle when dry.

An identifiable trade name or mark may be imprinted on castings by the casting foundry.

Iowa Department of Transportation
Highway Division

STANDARD ROAD PLAN | **RA-66B**

REVISION: Revise General Notes.

REVISION NO.
1
REVISION DATE
10-21-03

William J. Stein
APPROVED BY DESIGN METHODS ENGINEER

INTAKE GRATES
TYPES 2, 7, AND 8