WELDING REQUIREMENTS FOR PILING

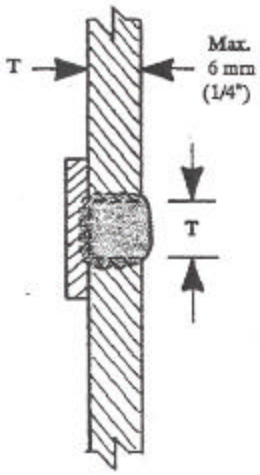

Figure A

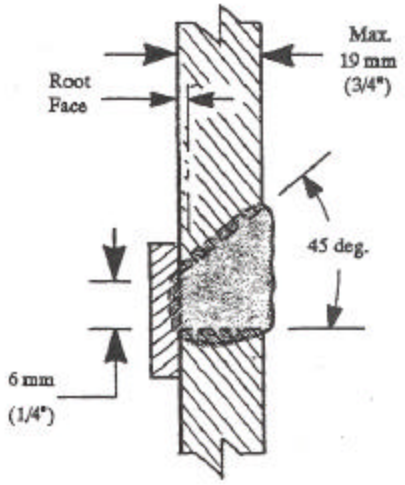

Figure B

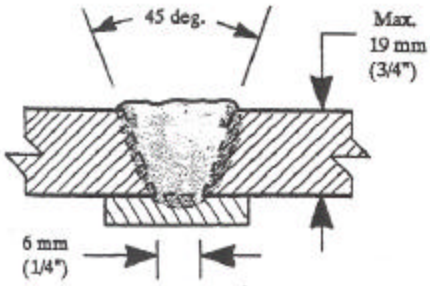

Figure C

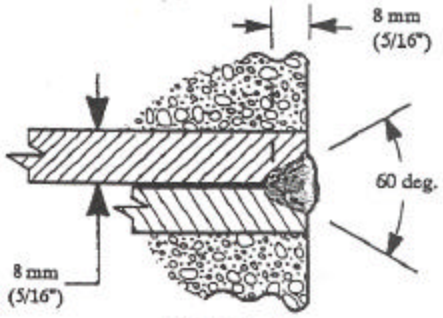

Figure D

Figure No.	Welding Position	Type of Weld	Pile Type and Standard	Welding Positions
A	Horizontal or Flat	Square Groove	1	2G 1G
B	Horizontal	Single Bevel Groove	H Pile with Backing Plate	2G
C	Flat	Single Vee Groove	H Pile with Backing Plate	1G
D	Horizontal	Single Vee Groove	Concrete	2G