GENERAL NOTES:

This figure depicts the typical spacing for check dams. Space check dams in accordance with this figure, unless indicated otherwise in the contract documents.

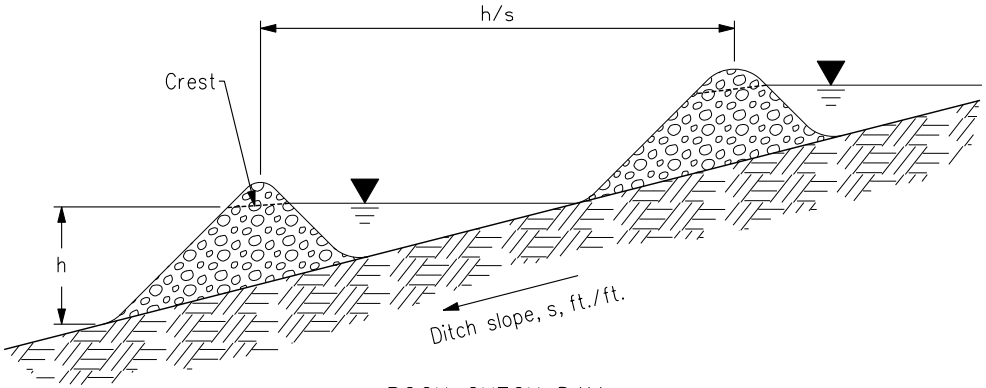

ROCK CHECK DAM

(See Figure 9040.7 for installation of Rock Check Dams.)

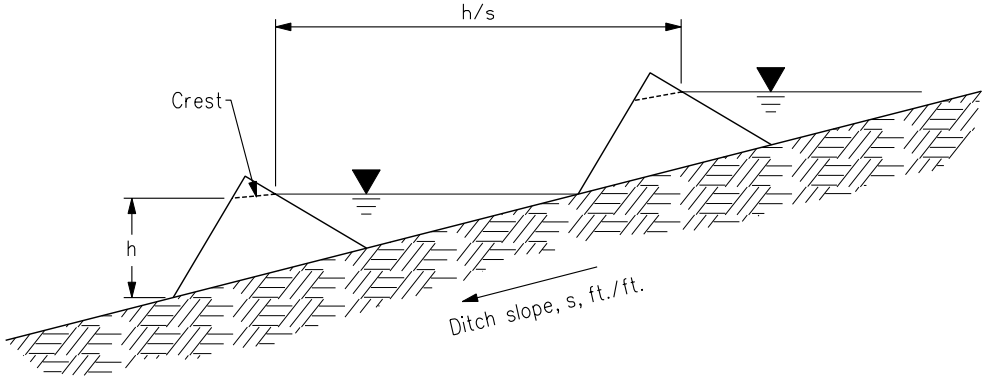

MANUFACTURED CHECK DAM

(Synthetic Permeable and Triangular Foam Check Dam)

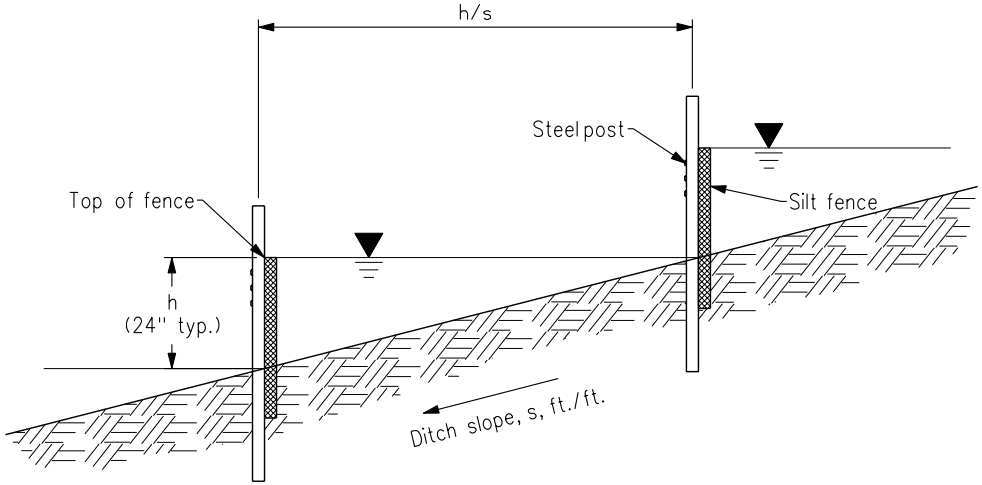

SILT FENCE CHECK DAM (DITCH CHECK)

(See Figure 9040.19 for installation of Silt Fence Ditch Checks.)

SUDAS	REVISION NO. ---
	REVISION DATE 10/17/06
FIGURE: 9040.6	SHEET 1 OF 1
CHECK DAM SPACING	

FIGURE: 9040.6 SHEET 1 OF 1