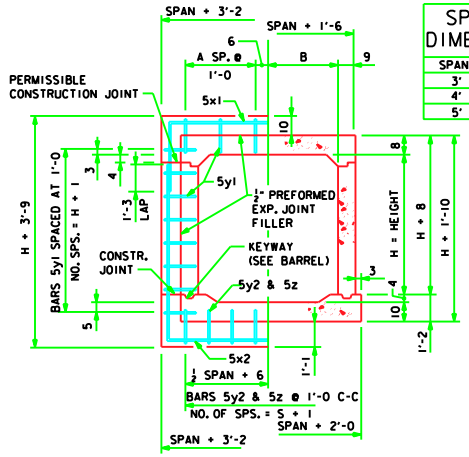

JOINT DETAIL
SECTION THRU BARREL

SPACING AND DIMENSION TABLE

SPAN	A	B
3'	1	1'-6
4'	2	2'-0
5'	2	2'-6

ESTIMATE OF QUANTITIES - ONE JOINT - 3', 4', & 5' SPAN

BILL OF REINFORCING STEEL			3' x 3'			4' x 4'			5' x 3'			5' x 4'			5' x 5'			5' x 6'		
MARK	LOCATION	SHAPE	NO.	LENGTH	WEIGHT	NO.	LENGTH	WEIGHT	NO.	LENGTH	WEIGHT	NO.	LENGTH	WEIGHT	NO.	LENGTH	WEIGHT	NO.	LENGTH	WEIGHT
5x1	SLAB AND WALLS		3	13'-1	41	3	14'-1	44	3	15'-1	47	3	15'-1	47	3	15'-1	47	3	15'-1	47
5x2	FLOOR AND WALLS		3	14'-5	45	3	17'-5	54	3	16'-5	51	3	18'-5	58	3	15'-1	47	3	15'-1	47
5x3	WALLS		—	—	—	—	—	—	—	—	—	—	—	—	6	4'-5	28	6	5'-5	34
5y1	TOP AND SIDES		14	4'-10	71	18	4'-10	91	16	4'-10	81	18	4'-10	91	20	4'-10	101	22	4'-10	111
5y2	BOTTOM		5	6'-2	32	6	6'-2	39	7	6'-2	44	7	6'-2	44	7	6'-2	44	7	6'-2	44
5z	BOTTOM & FLOOR		5	2'-10	15	6	2'-10	18	7	2'-10	21	7	2'-10	21	7	2'-10	21	7	2'-10	21
TOTAL WEIGHT (LBS.)					204			246			244			261			288			304
TOTAL CONCRETE				1.5 cu. yds.			1.8 cu. yds.			1.8 cu. yds.			1.9 cu. yds.			2.1 cu. yds.			2.2 cu. yds.	

CONCRETE PLACEMENT

SIZE	FOOTING	WALLS	SLAB
3' x 3'	.656	.343	.518
4' x 4'	.740	.472	.584
5' x 3'	.823	.343	.647
5' x 4'	.823	.472	.647
5' x 5'	.823	.600	.647
5' x 6'	.823	.729	.647

BENT BAR DETAILS

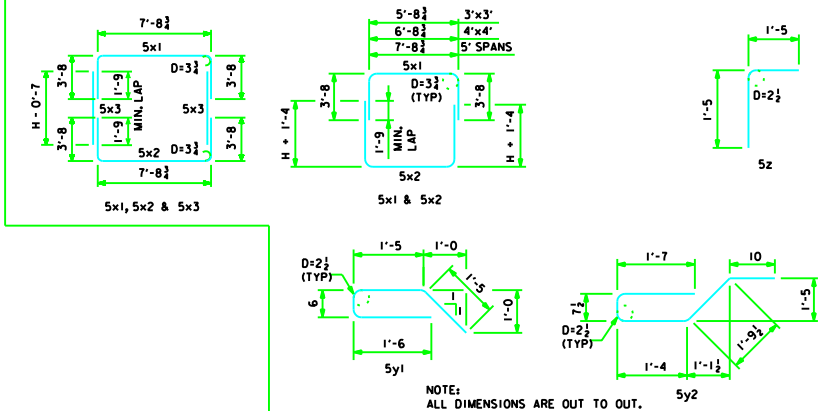

NOTE:
ALL DIMENSIONS ARE OUT TO OUT.
D = PIN DIAMETER.

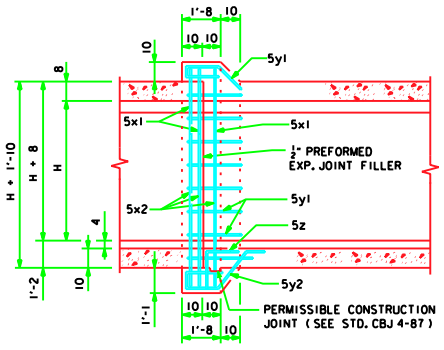

LONGITUDINAL SECTION

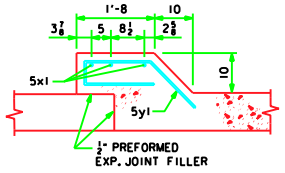

TOP & SIDES - BARS 5y1

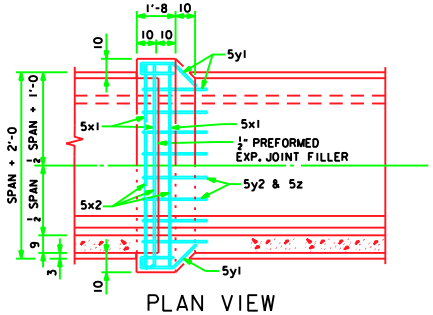

PLAN VIEW

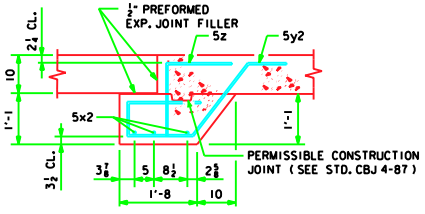

BOTTOM BARS - 5y2 & 5z

NOTES:

1. DIMENSIONS AND QUANTITIES SHOWN BASED ON SLAB THICKNESS OF 8", WALL = 9", AND FLOOR = 10".
2. CHANGE LENGTHS OF BARS 5x1, 5x2, 5z, AND ADJUST REINFORCING STEEL AND CONCRETE QUANTITIES ACCORDINGLY FOR SLAB, WALL, AND FLOOR THICKNESSES OTHER THAN SHOWN.
3. ALL BAR LENGTHS ARE ESTIMATED WITH A 2" CLEARANCE FROM CONCRETE EDGE TO OUTSIDE OF BAR, EXCEPT AS NOTED.
4. MATERIAL AND CONSTRUCTION TO BE IN ACCORDANCE WITH THE CURRENT STANDARD SPECIFICATIONS OF I.D.O.T.
5. SEE DRAWING RCB-GI-87 FOR GENERAL INFORMATION, SPECIFICATIONS, AND DESIGN STRESSES.
6. BARREL FLOOR BARS m1 ARE TO BE SHORTENED 6" AT BELL JOINTS.

LATEST REVISION DATE : 04-07

APPROVED BY :

STANDARD DESIGN

CULVERT BELL JOINTS

FOR
REINFORCED CONCRETE BOX CULVERTS
3', 4' & 5' SPAN

IOWA DEPARTMENT OF TRANSPORTATION - HIGHWAY DIVISION

MAY , 1987

CBJ 1-87

REVISED 04-07 - BAR SIZE ADDED TO BAR LABEL. UPDATED BAR LISTS TO INCLUDE INDIVIDUAL WEIGHTS. 5x BAR LENGTHS CHANGED.
CBJ 1-87